# Report of Japanese Government

# to the IAEA Ministerial Conference on Nuclear Safety

- The Accident at TEPCO's Fukushima Nuclear Power Stations -

June 2011

Nuclear Emergency Response Headquarters

Government of Japan

# 1 Report of Japanese Government to the IAEA Ministerial Conference on Nuclear Safety - The Accident at TEPCO's Fukushima Nuclear Power Stations -

JAPANESE

## 2 Table of Contents


Cover

Contents of Summary

I. Introduction

II. Overview of Nuclear Safety Regulations and Other Regulatory Framework in Japan before the Accident

1. Legislative and regulatory mechanism for nuclear safety II-1
2. Mechanism for nuclear emergency responses II-8

III. Disaster damage by Tohoku Region - Off the Pacific Ocean Earthquake and Tsunami in Japan

1. Disaster damage by the Tohoku Region - Off the Pacific Ocean Earthquake and Tsunami in Japan III- 1
2. Damage caused by earthquake and tsunami hitting Fukushima NPSs III-29
3. Seismic and tsunami damage to other NPSs III-47
4. Assessment of earthquake and tsunami damage III-63

IV. Occurrence and Progress of Accidents in Fukushima Nuclear Power Stations

1. Outline of Fukushima Nuclear Power Stations IV- 1
2. Safety Assurance and Other Situations in Fukushima NPSs IV- 3
3. Condition of the Fukushima NPSs before the earthquake IV-30
4. Occurrence and progression of the accident at the Fukushima NPSs IV-33
5. Situation of Each Unit etc. at Fukushima NPS [PDF 1] [PDF 2] IV-37
6. Situation at Other Nuclear Power Stations IV-119
7. Evaluating of accident consequences IV-123

V. Response to nuclear emergency

1. Emergency response after the quake occurred V- 1
2. Implementation of environmental monitoring V-16
3. Measures for agricultural products and drinking water, etc. V-30
4. Measures for additional protected areas V-32
5. Assessment of nuclear emergency response V-35

VI. Discharge of radioactive materials to the environment

1. Evaluation of the amount of radioactive materials discharged to the air VI-1
2. Evaluation on the amount of radioactive materials discharged to the sea VI-4

VII. Situation regarding radiation exposure

1. Situation regarding radiation exposure of related workers including radiation workers VII-1
2. Response to radiation exposure of residents in the vicinity and the overall situation VII-7
3. Evaluation of the situation of radiation exposure VII-10

VIII. Cooperation with the international community

1. Support from other countries VIII-1
2. Cooperation with international organizations VIII-2
3. Evaluation of cooperation with the international community VIII-3

IX. Communication on the accident

1. Communication with residents in the vicinity and the general public in Japan IX- 1
2. Communication with international community IX- 7
3. Provisional evaluations based on rating of International Nuclear Events Scale (INES) IX- 9
4. Evaluation on communication regarding the accident IX-10

X. Efforts to restore the accident in future

XI. Response at other NPS

XII. Lessons learned from the accident so far

XIII. Conclusion

Contents of Summary

1. Introduction
2. Situation of Nuclear Safety Regulations and Other Regulatory Frameworks in Japan before the Accident
3. Disaster Damage by Tohoku District - off the Pacific Ocean Earthquake and Tsunami in Japan
4. Occurrence and Development of the accident in Fukushima Nuclear Power Stations
5. Response to Nuclear Emergency
6. Discharge of Radioactive Materials to the Environment
7. Situation regarding Radiation Exposure
8. Cooperation with the International Community
9. Communication regarding the Accident
10. Efforts to Restore the Accident in the Future
11. Response in Other Nuclear Power Stations
12. Lessons Learned from the Accident So Far
13. Conclusion

## 1. Introduction

The Tohoku District - off the Coast of Pacific Ocean Earthquake and tsunami caused by the earthquake attacked the Fukushima Dai-ichi and Fukushima Dai-ni Nuclear Power Stations (hereinafter referred to as “Fukushima NPS”) of Tokyo Electric Power Co. (TEPCO) at 14:46 on March 11, 2011 (JST, the same shall apply hereinafter) and nuclear accident followed at an unprecedented scale and over a lengthy period.

For Japan, the situation has become extremely severe since countermeasures to deal with the nuclear accident have had to be carried out along with dealing with the broader disaster caused by the earthquake and tsunami.

This nuclear accident has turned to be a major challenge for Japan, and Japan is now responding to the situation, with the relevant domestic organizations working together, and with support from many countries around the world. Japan also takes it very seriously and with remorse that this accident has raised concerns around the world about the safety of nuclear power generation. And above all Japan feels sincere regret for causing anxiety among the people all over the world

about the safety of nuclear power facilities and the release of radioactive materials.

Currently, Japan is dealing with the issues and working towards restoration from the accident utilizing accumulated experience and knowledge. It is Japan's responsibility to share correct and precise information with the world continuously in terms of what happened in Fukushima NPS, including details about how the events progressed, and how Japan has been working to settle the accident. Japan also recognizes it as its responsibility to share with the world the lessons it has learned from this process.

This report is prepared based on the recognition mentioned above, as the report from Japan for the International Atomic Energy Agency (IAEA) Ministerial Conference on Nuclear Safety which will be convened in June 2011. The Government-TEPCO Integrated Response Office is engaged in working toward restoration from the accident under the supervision of Mr. Banri Kaieda, the Minister of Economy, Trade and Industry in conjunction with and joining forces with the Nuclear and Industrial Safety Agency, and TEPCO. Preparation of this report was carried out by the Government Nuclear Emergency Response Headquarters in considering the approach taken by the Government-TEPCO Integrated Response Office toward restoration, and by hearing the opinions from outside experts. The work has been managed as a whole by Mr. Goshi Hosono, Special Advisor to the Prime Minister, who was designated by the Prime Minister Kan in his capacity as General Manager of the Government Nuclear Emergency Response Headquarters (GNER HQs).

This report is a preliminary accident report, and represents a summary of the evaluation of the accident and the lessons learned to date based on the facts gleaned about the situation so far. In terms of the range of the summary, technical matters related to nuclear safety and nuclear emergency preparedness and responses at this moment are centered on, and issues related to compensation for nuclear damage and the wider societal effects and so on are not included.

On top of preparing this report, the Government has established the "Investigation Committee on the Accidents at the Fukushima Nuclear Power Station of Tokyo Electric Power Company" (hereinafter referred to as "the Investigation Committee") in order to provide an overall investigation of the utility of countermeasures being taken against the accident that has occurred in Fukushima NPS. In this Investigation Committee, independence from Japan's existing nuclear energy administration, openness to the public and international community, and comprehensiveness in examining various issues related not only to technical elements but also to institutional aspects, are stressed. These concepts are used as the base to strictly investigate

all activities undertaken so far, including activities by the Government in terms of countermeasures against the accident. The contents of this report will also be investigated by the Investigation Committee, and the progress of the investigation activities will be released to the world.

Japan's basic policy is to release the information about this accident with a high degree of transparency. In terms of the preparation of this report under this policy, we have paid attention to providing as accurately as possible an exact description of the facts of the situation, together with an objective evaluation of countermeasures against the accidents, providing a clear distinction between known and unknown matters. Factual descriptions are based on the things that were found by May 31, this year.

Japan intends to exert all its power to properly tackle the investigation and analysis of this accident, and to continue to provide those outcomes to both to the IAEA and to the world as a whole.

## 2. Situation of Nuclear Safety Regulations and Other Regulatory Frameworks in Japan before the Accident

Safety Regulations for NPSs in Japan are mandated under the "Act on the Regulation of Nuclear Source Material, Nuclear Fuel Material and Reactors" and "The Electricity Business Act". The Nuclear and Industrial Safety Agency (NISA) in the Ministry of Economy, Trade and Industry is responsible for these regulations. The Nuclear Safety Commission (NSC), which is established under the Cabinet Office, has a role to supervise and audit the safety regulation activities implemented by NISA, and has the authority to make recommendations through Prime Minister to the Minister of Economy, Trade and Industry to take necessary measures, if necessary. When the Minister of Economy, Trade and Industry issues a license to establish an NPS, the Minister has to seek opinions from the NSC regarding safety issues beforehand.

The monitoring and the measurement activities for preventing radiation damages and for evaluating radioactivity levels are carried out by related government agencies including the Ministry of Education, Culture, Sports, Science & Technology (MEXT) based on the related laws and regulations.

Responses to nuclear accidents in Japan are supposed to be carried out based on the Act on Special Measures Concerning Nuclear Emergency Preparedness, (hereinafter referred to as

“ASMCNE”), which was established after the occurrence of the criticality accident in a JCO nuclear fuel fabrication facility in 1999. ASMCNE complements the Disaster Countermeasures Basic Law should a nuclear emergency occur. ASMCNE stipulates that the national and local governments, and the licensee shall address a nuclear emergency by closely coordinating each other, that the Prime Minister shall declare a nuclear emergency situation in response to the occurrence of a nuclear emergency situation and give instructions to evacuate the area or to take shelter as appropriate, and that the GNER HQs headed by the Prime Minister shall be established to respond to the situations etc.

Emergency environmental monitoring, which is one of the responses to be taken at the time of a nuclear disaster, shall be implemented by local governments and supported by MEXT.

3. Disaster Damage by Tohoku District - off the Pacific Ocean Earthquake and Tsunami in Japan

The Pacific coast area of eastern Japan was attacked by the Tohoku District - off the Pacific Ocean Earthquake, which occurred at 14:46 on March 11, 2011. This earthquake occurred in an area where the Pacific plate sinks beneath the North American plate and the magnitude of this earthquake was 9.0, which is the largest, recorded in the history in Japan. Seismic source was at latitude 38.1 north, longitude 142.9 east and at a depth of 23.7km.

The crustal movement induced by this earthquake extended over a wide range, from the Tohoku District to Kanto District. Afterwards, tsunamis attacked the Tohoku District in a series of seven waves, resulting in the inundation of an area as large as 561km$^2$. At the time of issuing this report, approximately 25,000 people are reported dead or missing.

In terms of the earthquake observed in Fukushima NPS, the acceleration response spectra of the earthquake movement observed on the basic board of reactor buildings exceeded the acceleration response spectra of the basic earthquake movement in design for partial periodic bands in Fukushima Dai-ichi NPS. As for Fukushima Dai-ni NPS, the acceleration response spectra of the earthquake movement observed on the basic board of the reactor buildings was below the acceleration response spectra of the basic earthquake movement in design. The earthquake damaged the external power supply.

Thus far, major damages to the reactor facilities which are important for safety function has yet to be recognized. Further investigations are needed because there are still unknown detailed

situations.

In terms of the damage to the external power supply in Fukushima NPS, a total of 6 external power supply sources had been connected to the Dai-ichi Power Station on the day the earthquake hit. However, all power supplies from these 6 lines stopped due to the damage to the breakers, etc. and the collapse of the power transmission line tower due to the earthquake. Further, in the Fukushima Dai-ni NPS, on the day of the earthquake, a total of 4 external power supply sources were connected, but, only one of them remained to supply electricity as among the rest of them, one line was under maintenance, one stopped due to the earthquake, and another one also stopped (After the completion of restoration works at 13:38 on the next day, March 12, one power supply was restored, and two sources supplied the electricity thereafter.)

With respect to the tsunami onslaught, Fukushima Dai-ichi NPS was hit by the first enormous wave at 15:27 on March 11 (41 minutes after the earthquake), and the next enormous wave around 15:35. As for Fukushima Dai-ni NPS, it was hit by the first enormous wave at around 15:23 (37 minutes after the earthquake) and by the next enormous wave at around 15:35. (Based on TEPCO's announcement.) The license for the establishment of nuclear reactors in Fukushima Dai-ichi NPS was based on the assumption that the maximum size of expected tsunami is 3.1 m on the design-basis. The assessment in 2002 based on "Tsunami Assessment Method for Nuclear Power Plants in Japan" proposed by the Japan Society of Civil Engineers (JSCE) showed that the maximum water level would be 5.7m, and TEPCO rose the height of seawater pump installation in Unit 6 responding to that assessment. However, the actual tsunami height this time was 14 to 15m, and the seawater pump facilities for cooling auxiliary systems in all units were submerged and stopped their functions, and in addition to that, all the emergency diesel power generators and the distribution boards installed in the basement of the reactor buildings and turbine buildings except for Unit 6 were inundated and stopped their functions.

For Fukushima Dai-ni NPS, the maximum tsunami height was expected to be 3.1 to 3.7m on the design-basis Further, the said assessment by JSCE in 2002 showed that the maximum water level would be 5.1 to 5.2m. Because of the tsunami, most of seawater pump facilities for cooling auxiliary systems except for some were submerged and stopped their functions, and the emergency diesel power generators installed in the basement of the reactor buildings stopped.

Thus, the assumption of and the preparedness for an onslaught of enormous tsunami were not sufficient.

## 4. Occurrence and Development of the Accident in Fukushima Nuclear Power Stations

### (1) Outline of Fukushima Nuclear Power Station

Fukushima Dai-ichi NPS is located in the towns of Okuma and Futaba of Futaba County in Fukushima Prefecture, and consists of 6 Boiling Water Reactors (BWR); Units 1 to 6 are installed, whose total generating capacity is 4,696 MW.

Fukushima Dai-ni NPS is located in the towns of Tomioka and Naraha of Futaba county in Fukushima Prefecture, and consists of 4 BWRs whose total generating capacity is 4,400 MW.

### (2) Status of safety assurance for Fukushima NPS

In facilities with nuclear reactor, occurrence of failures has to be prevented even if natural phenomenon, etc. should occur. However, presuming that failures may nevertheless happen, protective measures are provided to secure safety even when the unusual situation of design basis event should happen. In addition, Japan started taking accident management measures in 1992, which would minimize the possibility of reaching the state of a severe accident as much as possible when these protective measures are not enough and would mitigate the effects even when the situation reached the state of severe accident. Implementation of the accident management measures is not required by law on the safety regulations. The accident management measures are implemented by nuclear operators voluntarily, and the government requires them to make reports on their implementation.

The accident management measures in Fukushima NPS are implemented for the following four functions; the functions to shutdown the nuclear reactor, the functions to inject water into nuclear reactors and PCV, the functions to remove heat from PCV, and the functions to support the safety functions. For example, measures to maintain functions to inject water into the nuclear reactor includes that the connection to the piping be secured for water injection functions to nuclear reactors through PCV cooling system and the core spray system from the existing Make Up Water Condensate (MUWC) system and the fire extinguishing system to be utilized as the alternative water-injection equipment.

(* Severe Accident: An event that significantly exceeds the design basis event, and the situation where appropriate cooling for the reactor core or control of reactivity is rendered inoperable by the postulated measures under the evaluation for safety design, resulting in serious damage to

the reactor core. )

(**Accident Management: Measures taken to prevent an event leading to a severe accident, or to mitigate its influence in the event of a severe accident, by utilizing a) functions other than the anticipated primary ones under the safety margin and safety design included in the current design or b) newly installed equipment in preparation for a severe accident, etc.)

(3) Operational status of Fukushima NPS before the earthquake

In terms of the operating status in Fukushima NPS before the earthquake on March 11, Unit 1 was under operation at its rated electric power, Units 2 and 3 were under operation at their rated thermal power, and Units 4, 5 and 6 were under periodical inspection. Among these Units, Unit 4 was undergoing a major renovation construction, and all the nuclear fuel in the RPV had already been transferred to the spent fuel pool. Moreover, 6,375 units of spent fuel were stored in the common spent fuel pool.

In Fukushima Dai-ni NPS, all nuclear reactors, Units 1 to 4 were under operation at their rated thermal power.

(4) The outbreak and development of the accident in Fukushima NPS

In Fukushima Dai-ichi NPS, Units 1 to 3 which were under operation automatically shut down at 14:46 on March 11. All of the six external power supply sources were lost because of the earthquake. This caused the emergency diesel power generators to start up. However, seawater pumps, emergency diesel generators and distribution boards were submerged because of the tsunami onslaught, and all emergency diesel power generators stopped except for one generator in Unit 6. For that reason, all AC power supplies were lost except for Unit 6. One emergency diesel power generator (an air-cooled type) and the distribution board escaped submersion and continued operation in Unit6. In addition, since the seawater pumps were submerged by the tsunami, residual heat removal systems to release the residual heat inside the reactor to the seawater and the auxiliary cooling system to release the heat of many equipments to the seawater lost their functions..

Operators of TEPCO followed TEPCO's manuals for severe accidents and urgently attempted to secure power supplies in cooperation with the government, in order to recover many equipments of the safety systems while the core cooling equipment and the water-injection equipment which

automatically started up were operating. However, they could not secure power supplies after all.

Since the core cooling functions using AC power were lost in Units 1 to 3, the core cooling functions without using AC power operated or attempted were made to that end. These are the operation of the Isolation condenser*** in Unit 1, the operation of reactor core isolation cooling system**** (RCIC) in Unit 2 and the operation of RCIC and high pressure injection system***** (HPCI) in Unit 3.

These core cooling systems that do not utilize AC power supplies stopped functioning thereafter, and were switched to alternative injection of fresh water or sea water by the fire distinguishing line using fire engine pumps.

Concerning Units 1 to 3 of Fukushima Dai-ichi NPS, as the situation where water injection to each RPV was impossible continued for a certain period of time, nuclear fuels in each reactor core were not covered by water but were exposed, and led to a core melt. A part of the melted fuel stayed at the bottom of the RPV.

A large amount of hydrogen was generated by chemical reactions between the zirconium of the fuel cladding tubes etc. and water vapor. In addition, the fuel cladding tubes were damaged and radioactive materials therein were discharged into the RPV. Further, these hydrogen and radioactive materials were discharged into the PCV during the depressurization process of the RPV.

Injected water vaporizes after absorbing heat from the nuclear fuel in the RPV. Accordingly, the inner pressure rose in the RPV which lost its core cooling function, and this water vapor leaked through the safety valves into the PCV. Due to this, the inner pressure of the PCVs in Units 1 to 3 rose gradually, and the PCV wet well vent operations were carried out a number of times where the gas in the PCVs are released from the gas phase area in the suppression chamber into the atmosphere, through the ventilation stack, for the purpose of preventing damage of the PCV caused by the pressure therein.

(*** Isolation condenser: The equipment with the function to return water condensed from water-vapor in the RPV by natural circulation (pump driving is not required) to cool the RPV, when the RPV is isolated due to the loss of external power supply etc. (when reactor cooling cannot be done by the main condenser). Isolation condenser has the structure to cool the

water-vapor that was lead into the heat transfer tube with the water stored in condenser (body side).

(**** Reactor core isolation cooling system (RCIC): The system that cools the reactor cores when reactors are isolated from feed water and condenser systems due to the loss of external power, etc. Either the condensate storage tank or the pressure suppression pool water can be used as water source. The driving system for the pump is a turbine which uses some of the steam in the reactors)

(***** High pressure injection system (HPCI): One of the emergency core cooling systems that injects water with the pump driven by providing the water-vapor generated by the decay heat to the turbine.)

After the wet well venting of the PCVs, explosions presumably caused by hydrogen which leaked from the PCV occurred in the upper area of the reactor buildings, and broke the operation floor in the reactor buildings of Units 1 and 3. As a result of these incidents, a lot of radioactive materials were discharged to the atmosphere. Following the breaking of the Unit 3 building, an explosion probably caused by hydrogen, occurred in the reactor building of the Unit 4 and broke its upper area. In Unit 4, all core fuels were transferred to the spent fuel pool for periodical inspection before the earthquake. During this time, it seems that in Unit 2 a hydrogen explosion occurred and caused damage at the point, presumably near the suppression chamber.

The most urgent task at the site along with recovery of power supply and continuation of water injection to reactor vessels was water injection to the spent fuel pools. In the spent fuel pool in each unit, the water level continued to drop with the evaporation of water caused by the heat of the spent fuel in the absence of pool water cooling system due to the loss of power supply. Water injection to the spent fuel pool was carried out by the Self-defense Forces, the Fire and Disaster Management Agency and the National Police Agency using the helicopters and water cannon trucks. Concrete pump trucks were secured in the end, which led to stable water injection using fresh water in the nearby reservoirs after the initial seawater injection.

(5) Status of each Unit in Fukushima NPS

1) Fukushima Dai-ichi NPS Unit 1

· (Loss of power supply) The reactor was scrammed by the earthquake that occurred at 14:46, on March 11. The external power supply was lost due to the earthquake and two emergency diesel generators started up. The two emergency diesel generators were stopped by the tsunami at 15:37 on the same day and all AC power was lost.

· (Cooling of the reactor) The emergency isolation condenser* (IC) automatically started up at 14:52 on March 11 and started cooling the reactor. Subsequently, the IC stopped functioning at 15:03 on the same day. According to the operation procedure document, the cooling speed is to be adjusted to 55 degrees Celsius/ hour. The pressure in the reactor rose and fell three times afterwards, which indicates that the IC had been manually operated. According to TEPCO, fresh water injection from a fire extinguishing line started at 05:46 on March 12, using fire engine pump, and 80,000 liters of water- was injected by 14:53 on the same day, but they claim that it is unknown when water-injection stopped. Seawater injection started at 19:04 using the fire extinguishing line. There was some confusion in communications and the chain of command on seawater injection between the government and the main office of TEPCO, but seawater injection continued following the decision by the director of Fukushima Dai-ichi NPS. Injection of fresh water resumed on March 25 with the injection of water stored in the pure water tank. At least for one hour after the earthquake, the water level in the reactor was not low enough to trigger an automatic start-up (L-L: 148cm below the bottom of the separator) of the High Pressure Coolant Injection system (HPCI), and there has been no record of a start-up.

· (Status of the reactor core) Water injection seemed to have stopped since the total loss of AC power at 15:37 on March 11, until the start of fresh water injection at 5:46 on March 12, for 14 hours and 9 minutes. From the results of the evaluation by NISA (on the assumption that the HPCI did not operate), it seems that the fuel was exposed due to a drop of the water level around 17:00 on March 11, and that the core melt started afterwards. A considerable amount of melted fuel appears to have moved to and accumulated at the bottom of the RPV. There is a possibility that the bottom of the RPV is damaged as part of the melted fuel dropped and accumulated on the dry well floor (lower pedestal) of the PCV.

· (Hydrogen explosion) Wet well venting of the PCV was carried out at 14:30 on March 12. Afterwards, a hydrogen explosion occurred in the reactor building at 15:36 on the same day. Zirconium appears to have reacted with water with the rise of the temperature in the RPV, and generated hydrogen. The gas containing the hydrogen accumulated in the upper area of the reactor buildings due to the leakage, etc. from the PCV appears to have triggered the

hydrogen explosion. Injecting nitrogen to the PCV started on April 7.

· (Leakage of cooling water) The cooling water which was injected to the RPV appears to be leaking from its bottom. The total amount of water injected to the RPV was approximately 13,700 metric tons (information by TEPCO, as of May 31.), and total generated steam is estimated at 5,100 metric tons. Therefore the amount of leakage seems to be the difference between these two, approximately 8600 metric tons, minus the amount inside the RPV (approximately 350$m^3$).

2) Fukushima Dai-ichi NPS Unit 2

· (Loss of power supply) The reactor was scrammed by the earthquake at 14:47, on March 11 and the external power supply was lost and two emergency diesel generators started up. The two emergency diesel generators were stopped by the tsunami and all AC power supply was lost at 15:41 on the same day.

· (Cooling of the reactor) TEPCO started up the Reactor Core Isolation Cooling System (RCIC) manually around 14:50 on March 11. The RCIC automatically stopped because of the high water level in the reactor at around 14:51 on the same day. Afterwards, TEPCO manually started it up at 15:02 and it stopped again at 15:28 on the same day. TEPCO started it up again manually at 15:39 on the same day. The RCIC stopped at 13:25 on March 14. Seawater injection using the fire pump started at 19:54 on the same day.

· (Status of the reactor core) Water injection appears to have stopped for 6 hours and 29 minutes from 13:25, on March 14 when the RCIC stopped, until seawater injection resumed at 19:54 on the same day. According to the results of NISA's analysis, it seems that the fuel was exposed due to a drop of the water level at around 18:00 on March 14 and that the core started melting afterwards. A considerable part of melted fuel seems to have moved to and accumulated at the bottom of the RPV. There is a possibility that the bottom of the RPV is already damaged and a part of the melted fuel dropped and accumulated on the dry well floor (lower pedestal) of the PCV.

· (Explosion noise) A PCV wet vent operation including that of small valves was carried out from around 11:00 on March 13. Noise of an explosion occurred at around 6:00 on March 15 around the suppression chamber of the containment vessel. There is a possibility that the explosion occurred in the torus room, as the gas including hydrogen was generated by a

reaction between the zirconium and water, along with the temperature rise in the RPV, invading the suppression chamber through such way as the opening of the main steam safety relief valve.

· (Leakage of cooling water) As of now, injected cooling water is thought to be leaking at the bottom of the RPV. The total amount of injected water to the RPV was approximately 21,000 metric tons (information by TEPCO, as of May 31), and the total generated steam is estimated at 7,900 metric tons. Therefore, the amount of leakage appears to be the difference between these two, approximately 13,100 metric tons minus the amount inside the RPV (approximately 500 $m^3$).

3) Fukushima Dai-ichi NPS Unit 3

· (Loss of Power supply) The reactor was scrammed by the earthquake at 14:47 on March 11, and the external power supply was lost and two emergency diesel generators started up. The two emergency diesel generators were stopped by the tsunami and all AC power was lost at 15:41 on the same day.

· (Cooling of the reactor) The Reactor Core Isolation Cooling System (RCIC) was manually started at 15:05 on March 11. It stopped automatically at 15:25 on the same day due to the rise of the reactor water level. It was started manually at 16:03 on the same day, and the RCIC stopped at 11:36 on March 12. The High Pressure Core Injection System (HPCI) automatically started due to the reactor low water level (L-2) at 12:35 on the same day, and the HPCI stopped at 2:42 on March 13. The reason for that appears to be a drop of pressure in the reactor. The other probable cause could be water-vapor outflow from the HPCI system.

· (Status of the reactor core) The operation for injection of water containing boric acid commenced using a fire extinguishing line at around 9:25 on March 13. However, the water could not be injected sufficiently due to the high pressure in the reactor, and the water level in the reactor lowered. As a result, water injection was halted at least for 6 hours and 43 minutes after the HPCI stopped at 02:42 on March 13 until water injection using the fire extinguishing line started at 09:25 on the same day. According to the results of NISA's analysis, the fuel appears to have been exposed due to a drop of the reactor water-level at around 08:00 on March 13, and the core started melting afterwards. A considerable part of melted fuel seems to have moved to and accumulated at the bottom of the RPV. However, there is a possibility that the bottom part of the RPV is damaged and a part of the fuel has dropped and

accumulated at the dry well floor (lower pedestal).

· (Hydrogen explosion) A wet well vent operation of the PCV was carried out at 05:20 on March 14. A hydrogen explosion occurred at the reactor building at 11:01 on the same day. It seems that zirconium and water reacted along with a rise in the temperature in the PCV, and that gas containing hydrogen by such ways as leakage from the PCV accumulated in the upper area of the reactor buildings triggered a hydrogen explosion.

· (Leakage of cooling water) It is assumed at the moment that injected cooling water is leaking at the bottom of the RPV. The total amount of water injected into the RPV was approximately 20,700 metric tons (information by TEPCO, as of May 31) and the total amount of the steam is estimated to be approximately 8,300 metric tons. A substantial amount equivalent to the difference between these two, approximately 12,400 metric tons minus the amount in the RPV (approximately 500$m^3$) appears to have been leaked.

4) Fukushima Dai-ichi NPS Unit 4

· (Cooling of the spent fuel pool) The reactor was shut down for periodic inspection. The nuclear fuel had been transferred to the spent fuel pool. External power supply was lost by the earthquake on March 11 and one emergency diesel generator started up. (The other one was under inspection and did not start up.) The emergency diesel generator stopped due to tsunami at 15:38 on the same day, and all AC power was lost. Both the cooling and feed water functions were thus lost. Water spraying over the spent fuel pool started from March 20.

· (Explosion in the reactor building) At around 6:00 on March 15, an explosion in reactor building occurred, and all the walls above the bottom of the operation floor, and the walls on the west side and along the stairs collapsed. A fire broke out near the northwest corner on the $4^{th}$ floor of reactor building at 09:38 on the same day. With regard to the explosion in the reactor building, one may doubt the possibility of inflow of hydrogen from unit 3 as the exhaust pipe for venting the PCV joins the exhaust pipe from unit 4 before the exhaust stack. However, the cause of explanation has not yet been identified.

5) Fukushima Dai-ichi NPS Unit 5

· (Securing of Power supply) The reactor was shut down for the periodical inspection. The external power supply was lost due to the earthquake at 14:46 on March 11, and two

emergency diesel generators started up. However, the two emergency diesel generators stopped at 15:40 on the same day due to the tsunami and all AC power was lost. Alternate power supply was taken from the emergency diesel generator of Unit 6 on March 13, 2011.

· (Cooling of the reactor and the spent fuel pool) Although the operation of the pressure reduction of the RPV was carried out at 06:06 on March 12, the reactor pressure slowly increased due to the effect of decay heat. The alternate power supply was taken from the emergency diesel generator of Unit 6 on March 13, and water injection into the reactor became possible, using the transfer pump for the condenser of Unit 5. Reduction of the pressure by a safety relief valve had been carried out since 05:00 on March 14, and replenishment of the water from the condensate storage tank to the reactor through the transfer pump was repeated to control the pressure and water level of the reactor. To carry out cooling by the residual heat removal system, a temporary seawater pump was installed and started up, and cooling of the reactor and the spent fuel pool was carried out in turn by switching the system constitution for the Residual Heat Removal (RHR) system on March 19. As a result, the reactor reached cold shutdown status at 14:30 on March 20.

6) Fukushima Dai-ichi NPS Unit 6

· (Securing of power supply) The reactor was shut down for the periodical inspection. External power supply was lost due to the earthquake at 14:46 on March 11, and three emergency diesel generators started up. Two emergency diesel generators were stopped by the tsunami at 15:40 on the same day, and the power supply was maintained by the remaining emergency diesel generator.

· (Cooling of the reactor and the spent fuel pool) Reactor pressure rose slowly due to the effect of decay heat. Water injection into the reactor became possible on March 13, using the transfer pump for the condenser with the emergency diesel generator. Reduction of the pressure by a safety relief valve has been carried out since March 14, and replenishment of the water from the condensate storage tank to the reactor through the transfer pump was repeated to control the pressure and the water level of the reactor. To carry out cooling by the residual heat removal system, a temporary seawater pump was installed and started up, and cooling of the reactor and the spent fuel pool was carried out in turn by switching the system constitution for the residual heat removal system on March 19. The reactor reached cold shutdown status at 19:27 on March 20.

7) Fukushima Dai-ni NPS

· (Overall) Reactors from Units 1 to 4 in Fukushima Dai-ni NPS which had been in operation were scrammed at 14:48 on March 11. A total of 4 external power supply lines were connected to this NPS. One line was under maintenance, another stopped due to the earthquake and another stopped one hour after the earthquake, which resulted in the electric supply by one line (The restoration work was completed at 13:38 on March 12, and two lines became available.) The reactors were hit by the tsunami at around 15:34 on the same day and the RHR systems of Unit 1, Unit 2 and Unit 4, etc. were damaged.

· (Unit 1) In terms of the reactor, cooling and water level maintenance were carried out by the reactor core isolation cooling system and Make Up Water Condensate (MUWC) system. However, the temperature of the suppression pool water exceeded 100 degrees Celsius because not all the heat could be removed. Cooling by the dry well spraying started at 07:10 on March 12. Cooling of the suppression pool started with the operation of the RHR system by connecting a temporary cable from the functioning distribution board at 01:24 on March 14. The temperature of the suppression pool became lower than 100 degrees Celsius at 10:15 on the same day, and the reactor reached cold shutdown status at 17:00 on the same day.

· (Unit 2) In terms of the reactor, cooling and water level maintenance were carried out by the reactor core isolation cooling system and the Make Up Water Condensate (MUWC) system. However, the temperature of the suppression pool water exceeded 100 degree Celsius because not all the heat could be removed. Cooling by the dry well spray started at 07:11 on March 12. Cooling of the suppression pool started with the operation of the RHR system by connecting temporary cable as well as Unit 1 at 07:13 on March 14. The temperature of the suppression pool became lower than 100 degrees Celsius at 15:52 on the same day and the reactor reached cold shutdown status at 18:00 on the same day.

· (Unit 3) The RHR system (A) and low pressure core spray system became unusable by the tsunami. However, the RHR system (B) was not damaged and cooling by the same system continued. Therefore the reactor reached cold shutdown status at 12:15 on March 12.

· (Unit 4) In terms of the reactor, although cooling and water level maintenance was carried out by the RCIC and the MUWC system, the temperature of the suppression pool water exceeded 100 degree Celsius because not all the heat could be removed. Cooling of the suppression pool started at 15:42 on March 14 with the operation of the RHR system. The

temperature of the suppression pool became lower than 100 degrees Celsius and the reactor reached cold shutdown status at 07:15 on March 15.

(5) Status of the other NPSs

1) Higashidori NPS of Tohoku Electric Power Co.

Higashidori NPS of Tohoku Electric Power Co. (one BWR)was shut down for the periodical inspection, and all fuels in the core were taken out to the spent fuel pool. All three lines of external power supply stopped due to the earthquake, and the power was supplied by an emergency diesel generator.

2) Onagawa NPS of Tohoku Electric Power Co.

In Onagawa NPS of Tohoku Electric Power Co. (BWR Unit 1 to 3) Units 1 and 3 were under operation and Unit 2 was under reactor start-up operation before the occurrence of the earthquake on March 11. All 3 reactors were scrammed by the earthquake. Four of five lines of external power supply stopped due to the earthquake, and one line remained. Unit 1 became on-site power loss and the power was supplied by emergency diesel generators. Water injection into the reactor was carried out by reactor core isolation cooling system, etc. and the reactor reached cold shutdown status at 0:57 on March 12. In Unit 2, the external power supply was maintained and there was no effect on the cooling function of the reactor. In Unit 3, although the external power supply was maintained, auxiliary equipment cooling seawater pump stopped. After that, water injection into the reactor by the RCIC, etc. was conducted and the reactor reached cold shutdown status at 1:17 on March 12.

3) Tokai Dai-ni NPS of Japan Atomic Power Company

Tokai No.2 NPS of Japan Atomic Power Company (one BWR) was under rated thermal power operation, and the reactor was automatically scrammed due to the earthquake at 14:48 on March 11. Although all three lines of external power supply stopped, three emergency diesel generators started up. One of those emergency diesel generators stopped due to the tsunami, but the power supply was secured by the remained two, and the reactor reached cold shutdown status at 0:40 on March 15.

## 5. Response to Nuclear Emergency

### (1) Emergency response after the accident occurred

In Fukushima Dai-ichi NPS, all AC power was lost due to the disaster of the earthquake and the tsunami. In accordance with the Paragraph 1, the Article 10 of the Special Law on Emergency Preparedness for Nuclear Disaster, TEPCO notified the government at 15:42 on March 11, 2011, on that day of the occurrence of the earthquake, that all AC power was lost in Units 1 to 5 in accordance with the Paragraph 1, the Article 10 of the Special Law on Emergency Preparedness for Nuclear Disaster.

After that, TEPCO recognized inability of water injection by the emergency core cooling system in Units 1 and 2 of Fukushima Dai-ichi NPS, and notified the government at 16:45 on the same day of a State of Nuclear Emergency in accordance with the Article 15 of the Special Law on Emergency Preparedness for Nuclear Disaster.

The Prime Minister declared the state of nuclear emergency at 19:03 on the same day, and established the Nuclear Emergency Response Headquarters and the Local Nuclear Emergency Response Headquarters, both of which are headed by the Prime Minister as Director General.

On March 15, the Integrated Headquarters for the Response to the Incident at the Fukushima Nuclear Power Stations (later, renamed as the Government – TEPCO Integrated Response Office on May 9) was established so that the government and the operator could work together in a concerted manner, decide to take necessary measures and promptly response while sharing information on the state of disasters at the nuclear facilities and its necessary measures

The Prime Minister, the Director-General of Nuclear Emergency Response Headquarters determined the evacuation area and the Stay In-house Area according to the judgment of the possibility of discharging radioactive materials, and instructed Fukushima Prefecture and relevant cities, towns and villages to follow the decision. Responding to the status of accidents in Fukushima Dai-ichi NPS, the evacuation area was set at an area within a 3km radius and the Stay In-house Area from a 3 to 10 km radius from the Fukushima Dai-ichi NPS at 21:23, March 11. Afterwards, according to the escalation of events, the evacuation area was expanded to a 20 km radius at 18:25, March 12, and the Stay In-house Area was expanded to a 30 km radius at around 11:00, March 15. Also, responding to the status of accidents in Fukushima Dai-ni NPS, the evacuation area within a 3 km radius and the Stay In-house Area from a 3 to 10 km radius

were set at the same time a nuclear emergency situation was declared at 7:45, March 12, the evacuation area was expanded to within 10 km radius at 17:39 on the same day. Then, the evacuation area was changed to within 8 km radius on April 21. Evacuation and Stay In-house instructions immediately after the accident were promptly implemented by a concerted effort by residents in the vicinity, local governments, the police and other relevant authorities.

The Prime Minister pronounced evacuation areas within a 20km radius of Fukushima Dai-ichi NPS as a caution area in accordance with the Basic Act on Disaster Control and instructed the mayors of cities and towns and the heads of villages and concerned local governments to prohibit access to the area on April 21.

The Local Nuclear Emergency Response Headquarters started its activities at Off-Site Center as designated by Basic Plan for Emergency Preparedness. However, it was moved to Fukushima Prefectural Office in Fukushima City due to high-level radiation as the nuclear accident escalated, communication blackout and lack of fuel, food and other necessities caused by logistic congestion around the site.

The longer the accident lasted, the heavier the burden on residents in the vicinity of the NPS became. In particular, many of the residents who were instructed to Stay In-house were voluntarily evacuated and those who remained in the area found it increasingly difficult to sustain their livelihoods due to the congested distribution of goods and logistics problems. To respond to this situation, the government launched support measures.

The primary functions of the Emergency Response Support System (ERSS), which monitors the status of reactors and forecasts the progress of the accident when a nuclear emergency occurs, could not be utilized because necessary information from the plants could not be obtained. In addition, the primary functions of the System for Prediction of Environmental Emergency Dose Information (SPEEDI), which conducts a quantitative forecast of variations of atmospheric concentrations of radioactive materials and air dose rates, could not be utilized because source term information could not be obtained. Although they were used in alternative ways, the process of their operation and disclosure of the results has remained as an issue.

(2)Implementation of the environmental monitoring

In the Basic Plan for Emergency Preparedness, local governments are in charge of environmental monitoring when a nuclear emergency occur. However, most of monitoring posts

became dysfunctional at first when the accident occurred. From March 16, it was decided that the Ministry of Education, Culture, Sports, Science and Technology (MEXT) would take charge of summarizing the environmental monitoring carried out by MEXT, local governments and cooperating U.S. organizations.

As for the land area outside the premises of the NPS, MEXT measures the air dose rate, radioactive concentrations in the soil, concentrations of radioactive materials in the air and takes environmental samples in cooperation with the Japan Atomic Energy Agency, Fukushima Prefecture, the Ministry of Defense, and electric companies. MEXT also carries out monitoring by aircraft in cooperation with the Ministry of Defense, TEPCO, the U.S. Department of Energy, etc. TEPCO carries out environmental monitoring at NPS sites and their vicinities, etc.

In terms of sea area near NPS, MEXT, the Fisheries Agency, the Japan Agency for Marine-Earth Science and Technology, the Japan Atomic Energy Agency, TEPCO, and others cooperate with each other to carry out the monitoring of radioactive concentrations, etc. in the seawater and in the seabed. And the Japan Agency for Marine-Earth Science and Technology is simulating the distribution and spread of radioactive concentrations.

The Nuclear Safety Commission evaluates and announces results of these environmental monitoring efforts as they become available.

Environmental monitoring of air, sea and soil of the premises and surrounding areas of Fukushima NPS is conducted by TEPCO.

(3) Measures regarding agricultural products, drinking water, etc.

The Ministry of Health, Labour and Welfare decided that the "Indices relating to limits on food and drink ingestion" indicated by the Nuclear Safety Commission of Japan shall be adopted for the time being as provisional regulation values, and foods which exceed these levels shall not be supplied to the public for consumption pursuant to Food Sanitation Act. The Prime Minister, Director-General of Government Nuclear Emergency Response Headquarters has instructed municipalities concerned to restrict shipments of foods that exceed the provisional regulation level.

In terms of tap water, the Ministry of Health, Labour and Welfare notified departments and agencies concerned in the local governments of the necessity of avoidance of drinking tap water

if the radioactive concentration of tap water exceeds the level indicated by the Nuclear Safety Commission from March 19 onward, and released the monitoring results by the local governments concerned, as well.

(4) Measures for additional protected area

It had been revealed, according to the environmental monitoring data that there were areas where radioactive materials were accumulated at high level even outside of the 20 km radius. Therefore, the Prime Minister as Director-General of NERHQs instructed the heads of relevant local governments on April 22 that a deliberate evacuation area on the specific area beyond the 20 km radius needed to be established, and the area between the 20 km and 30 km radius which had been set as the Stay In-house Area excluding the area applicable to deliberate evacuation area within it was renamed as evacuation-prepared area in case of emergency, since the residents there could possibly be instructed to stay in-house or evacuate in case of emergency in future . By this, residents inside the deliberate evacuation area were directed to evacuate deliberately, and residents inside of evacuation-prepared area in case of emergency were directed to prepare for evacuation or for Stay In-house in case of an emergency.

6. Discharge of Radioactive Materials to the Environment

(1) Amount of radioactive materials discharged to the atmosphere

On April 12, both NISA and the Nuclear Safety Commission each announced the total discharged amount of radioactive materials to the atmosphere so far.

NISA estimated the total discharged amount from reactors in Fukushima Dai-ichi NPS according to the analysis results of reactor status, etc. by JNES and presumed that approximately $1.3 \times 10^{17}$ Bq of iodine-131 and approximately $6.1 \times 10^{15}$ Bq of cesium-137 were discharged. Subsequently, JNES re-analyzed the status of the reactors based on the report which NISA collected on May 16 from TEPCO on the plant data immediately after the accident occurred. Based on this analysis of reactor status and others by JNES, NISA estimated that total discharged amount of iodine-131 and cesium-137 were approximately $1.6 \times 10^{17}$ Bq and $1.5 \times 10^{16}$ Bq respectively. Nuclear Safety Commission estimated the discharged amount of certain nuclides to the atmosphere (discharged between March 11 to April 5) with assistance of the Japan Atomic Energy Agency (JAEA) from the back calculation based on the data of environmental monitoring and air diffusion calculation; the estimations are $1.5 \times 10^{17}$ Bq for

iodine-131 and 1.2 x $10^{16}$ Bq for cesium-137. The discharged amount since early April has been declining and is about $10^{11}$ Bq/h to $10^{12}$ Bq/h in iodine-131 equivalent.

(2) Discharged amount of radioactive materials to seawater

The water containing radioactive materials diffused from RPV was leaked into PCV in Fukushima Dai-ichi NPS. Also, because of water injection into the reactors from the outside for cooling, some injected water leaked from PCVs and accumulated in reactor buildings and turbine buildings. The management of contaminated water in reactor buildings and turbine buildings became a critical issue by the standpoint of workability in the buildings, and the management of contaminated water outside of the buildings became a critical issue from the standpoint of the prevention of the diffusion of radioactive materials to the environment.

On April 2, it was discovered that highly contaminated water with radiation level of over 1000 mSv/h had accumulated in the pit of power cables near the water intake of Unit 2 of Fukushima Dai-ichi NPS and it was poured into the seawater. Despite that, the outflow was stopped by stopping work on April 6, and the total discharged amount of radioactive materials was presumed to be approximately 4.7x $10^{15}$ Bq. As an emergency measure, it was decided that this highly contaminated water would be stored in tanks. However there were no available tanks at the time, and to secure the storage capacity for the contaminated water, low level radioactive water was discharged into the seawater from April 4 to April 10. The total amount of discharged radioactive materials was presumed to be approximately 1.5x $10^{11}$ Bq.

7. Status of radiation exposure

The government has changed the dose limit for personnel engaged in radiation work from 100 mSv to 250 mSv in the light of present situation of the accidents in order to prevent escalation of the accidents. This is decided based on the information that 500 mSv is the dose limit set for personnel engaged in emergency rescue work to avoid occurrence of deterministic effects provided for in a 1990 recommendation by the International Commission on Radiological Protection.

With regard to the activities by personnel engaged in radiation work in TEPCO, they had no other choice but chief workers would carry personal dosimeters and observe radioactivity for

the unit of their work groups, because a lot of personal dosimeters were soaked in seawater and became unusable. Afterwards, personal dosimeters became available, and all workers have been able to carry personal dosimeters since April 1.

The status of exposure doses of personnel engaged in radiation work is as follows. As of May 23, the number of total workers entered in the area was 7,800, and the average exposure dose was 7.7 mSv. The exposure doses for 30 of them were above 100 mSv. The internal exposure measurement of the radiation workers has been delayed and the exposure dose including internal exposure of a certain number of workers could exceed 250 mSv in the future. On March 24, two workers stepped into the accumulated water and their exposure doses were estimated to be less than 2 or 3 Sv.

As for radiation exposure to residents in the vicinity, there were no cases found to harm health in 195,345 (the number as of May 31) residents who received screening in Fukushima Prefecture. All 1, 080 children who went through thyroid gland exposure evaluation received the results lower than the screening level.

The estimation and the evaluation of exposure doses of residents in the vicinity, etc. are planned to be carried out with the use of the results of environmental monitoring, promptly after the survey of evacuation routes and activities conducted mainly by Fukushima prefecture with the assistance of relevant ministries, agencies and the National Institute of Radiological Science, etc.

8. Cooperation with the International Community

Since this nuclear accident occurred in Japan, experts have visited Japan from the United States, France, Russia, The Republic of Korea, China and the United Kingdom, exchanged opinions with concerned organizations in Japan, and gave a lot of advice in terms of stabilization of nuclear reactors and spent fuel pools, prevention of the diffusion of radioactive materials, and countermeasures against radioactive contaminated water. Japan also has received support from these countries and accepted materials required for measures against the nuclear accident.

Experts from international organizations specializing in nuclear power such as the IAEA and the OECD Nuclear Energy Agency (OECD / NEA) visited Japan and provided advice and so on. Also, international organizations such as the IAEA, the World Health Organization (WHO), the ICAO (International Civil Aviation Organization) and the IMO (the International Maritime

Organization), as well as the International Commission on Radiological Protection (ICRP) have provided necessary information to the international community from their technical standpoints.

9. Communication regarding the Accident

Initially after the occurrence of the accident, accurate and timely information was not sufficiently provided, typically shown in the delay of notifications to local governments and municipalities, which has been identified as a challenge in the field of communication on the accident. Transparency, accuracy and rapidity are important in domestic and international communication about accidents. The Japanese Government has utilized various levels and occasions such as press conferences at the Prime Minister's Office and those jointly held by the relevant parties. Although we have improved them as needed, considering what and how information should be provided, we need to continue making efforts to improve communication.

Important issues on the accident have been briefed at press conferences by the Chief Cabinet Secretary to explain to the citizens about the status of the accident as well as the view of the Japanese Government. TEPCO as a nuclear operator and NISA as a regulatory authority have also held press conferences on the status, details and development of the accident. NSC has provided important technical advice and explained about the evaluation of environment monitoring results and others at press conferences.

Joint press conferences participated by relevant organizations have been held since April 25 in order to share the same information. The Special Advisor to the Prime Minister, NISA, MEXT, Secretariat of NSC and TEPCO and other relevant organizations have participated in these joint press conferences.

As for inquiries from the general public, NISA has opened counseling hotline on the nuclear accident etc., and MEXT has also opened counseling hotline on the impact of radiation on health etc. Experts in academia including members of the Atomic Energy Society of Japan have actively explained and provided information to citizens.

Regarding provision of information to the international community, the Japanese Government has reported the accident status to the IAEA promptly pursuant to the Convention on Early Notification of a Nuclear Accident since the first report on 16:45 on March 11 right after the accident occurred. The Japanese Government has also reported the provisional evaluations of the International Nuclear and Radiological Event Scale (INES) when the government made an

announcement on each evaluation.

As for opportunities for communication with countries across the world including neighboring countries, briefings to diplomats in Tokyo and press conferences for foreign media have been conducted.

Notification to other countries including neighboring countries about deliberate discharge of accumulated water of low-level radioactivity to the sea on April 4 was not satisfactory. We sincerely regretted and have made every effort to ensure sufficient communication with international community and reinforce the notification system.

Provisional evaluations of the INES are as follows:

(1) The first report

Provisional evaluation of Level 3 was issued based on the fact determined by NISA at 16:36 on March 11 that the emergency core cooling system for water injection became unusable. This situation occurred because motor operated pumps lost function due to entire power loss at Units 1 and 2 of Fukushima Dai-ichi NPS.

(3) The second report

On March 12, the PCV venting of the Unit 1 of Fukushima Dai-ichi NPS was conducted and an explosion at its reactor building occurred. Based on environmental monitoring, NISA confirmed the emission of radioactive iodine, cesium and other radioactive materials, and made announcement on the provisional evaluation of Level 4 because NISA determined that the emission of over 0.1 % of the radioactive materials in the reactor core inventory occurred.

(4) The third report

On March 18, as some incidents to cause fuel damage were identified at Units 2 and 3 of Fukushima Dai-ichi NPS, NISA announced the provisional evaluation of Level 5 because the release of several percent of the radioactive materials in the core inventory was determined to have occurred based on the information obtained at the moment including that of the status of Unit 1.

(5) The fourth report

On April 12, regarding the accumulated amount of the radioactive materials released in the atmosphere, NISA announced the estimates from analytical results of the reactor status etc and NSC announced the estimates from dust monitoring data. (Please refer to VI. 1) The estimation by NISA was 370,000 TBq of radioactivity in iodine equivalent and the calculated value based on the estimate of NSC was 630,000 TBq. Based on these results, NISA announced provisional evaluation of Level 7 on the same day. Although one month passed between the third and the fourth report, the provisional INES evaluation should have been made more promptly and appropriately.

10. Efforts to Restore the Accident in the Future

Regarding the current status of Fukushima Dai-ichi NPS, fresh water has been injected to RPV through a feed water system in Units 1, 2 and 3 and has been continuously cooling the fuel in the RPV. This has helped the temperature around the RPV stay around 100 to 120 degrees Celsius at the lower part of RPV. Review and preparation for circulation cooling system including the process of transferring and treating accumulated water has been underway. Although the RPV and PCV of Unit 1 have been pressurized to some extent, steam generated in some units such as Units 2 and 3 seems to have leaked from the RPV and PCV, which appears to have condensed to accumulations of water found in many places including reactor buildings and some steam seems to have been released to the atmosphere. To respond to this issue, the status has been checked by dust sampling in the upper part of the reactor buildings and discussion and preparation for covering the reactor buildings has been underway.

Cold shutdown of Units 5 and 6 has been maintained using residual heat removal systems with temporary seawater pumps and their reactor pressure has been stable in between 0.01 ~ 0.02 MPa (Gauge pressure).

Details of the current status of each unit are listed in the following chart.

(Megapascal: Unit of pressure 1 MPa = 9.9 atmosphere. Gauge pressure is absolute pressure minus atmospheric pressure.)
TEPCO announced the “Roadmap towards Restoration from the Accident in Fukushima Daiichi Nuclear Power Station” on April 17, and the following 2 steps as targets: "Radiation dose in steady decline" as "Step 1" and "Release of radioactive materials is under control and radiation

dose is being significantly held down" as "Step 2." The timeline for achieving targets are tentatively set as follows: "Step 1" is set at around 3 months and "Step 2" is set at around 3 to 6 months after achieving Step1.

Subsequently, coolant leakage from the PCVs was found in Units 1 and 2. Since the same risk was found in Unit 3, TEPCO announced the revised roadmap on May 17. In the new roadmap, basically no change was made in the schedule, but new efforts were added including reviewing and improving cooling reactors, adding measures against tsunami and aftershocks, and improving the work environment for workers.

Particularly in the review of the issues of “Reactor”, the establishment of a “circulation cooling system” in which contaminated water accumulated in buildings (accumulated water) etc. is processed and reused for water injection to reactors, was prioritized for “cold shutdown” in Step 2.

The NERHQs also presented the approach toward restoration and that related to evacuation area in the announcement, “Temporary approach policy for measures for nuclear sufferers,” on May 17.

11. Response in Other Nuclear Power Stations

On March 30, NISA instructed all electric power companies and related organizations to implement emergency safety measures at all NPSs, in order to prevent the occurrence of nuclear disasters and core damage, etc. caused by tsunami-triggered total AC power loss, on the basis of the latest knowledge gained from the accident in Fukushima NPS. On May 6, NISA carried out on-site inspections at all NPSs (except Onagawa NPS, Fukushima Dai-ichi and Fukushima Dai-ni NPS), and confirmed that emergency safety measures were appropriately implemented at these NPSs. On May 18, NISA received an implementation status report from Onagawa NPS, where work to prepare against tsunami was delayed after it was hit by the tsunami. Regarding Fukushima Dai-ni NPS, which achieved a stable condition after cold shutdown on April 21, NISA also instructed the NPS to implement emergency safety measures, and received an implementation status report from it on May 20. NISA confirmed that all the nuclear power stations in Japan have appropriately arranged measures against total AC power loss, etc. which are expected to be implemented immediately as emergency safety measures.

Based on presumed causes of the accident and the additional knowledge gained from the

accident, which are stated in this report, and the lessons learned from the accident, which are mentioned in Section 12, NISA and other relevant ministries are to improve and strengthen the emergency safety measures that have been put in place. NISA will strictly verify the implementation status of enhanced measures by the nuclear operators and promptly come up with mid- and long-term measures.

The Headquarters for Earthquake Research Promotion of MEXT has estimated that there is an 87% percent chance of an imminent magnitude 8 earthquake in the Tokai region near the Hamaoka Nuclear Power Station of Chubu Electric Power Co., Inc. within the next 30 years. As this is accompanied with increasing concerns over the high possibility of a large-scale tsunami resulting from the envisioned earthquake, the government has placed its highest priority on public safety above all else, and considered that the operation of all Units at Hamaoka NPS should be halted until mid- to long-term countermeasures such as the construction of an embankment that can sufficiently withstand the envisioned Tokai Earthquake are implemented, and requested that Chubu Electric Power Co., Inc., should halt all reactors at the NPS on May 6. Chubu Electric Power Co., Inc. accepted this request and stopped operation of all the Units by May 14.

## 12. Lessons Learned from the Accident So Far

The accident of Fukushima NPS has the following aspects: it was triggered by a natural disaster; it led to a severe accident with damage to nuclear fuel, Reactor Pressure Vessels and Primary Containment Vessels; and accidents of multiple reactors were evoked at the same time. Moreover, as nearly three months have passed since the occurrence of the accident, a mid- to long-term initiative is needed to settle the situation imposing a large burden on the society such as a long-term evacuation of many residents in the vicinity and having a major impact on industrial activities including farming and livestock industries in the related area. There are thus many aspects different from the accidents in the past at Three Mile Island Nuclear Power Plant and Chernobyl Nuclear Power Plant.

The accident is also characterized by the following aspects. Emergency response activities had to be performed in a situation where the earthquake and tsunami destroyed the social infrastructure such as electricity supply, communication and transportation across a wide area in the vicinity. The occurrence of aftershocks frequently impeded various accident response activities.

This accident led to a severe accident, shook the trust of the public, and warned those engaged in nuclear energy of their overconfidence in nuclear safety. It is therefore important to learn lessons thoroughly from this accident. We present the lessons classified into five categories at this moment bearing in mind that the most important basic principle in securing nuclear safety is defense in depth.

We present lessons that have been learned to date as classified in five categories. . We consider it inevitable to carry out a fundamental review on nuclear safety measures in Japan based on these lessons. Some of them are specific to Japan. However, we include these specific lessons from the standpoint to show the overall structure of lessons.

The lessons in category 1 are those learned based on the fact that this accident has been a severe accident, and from reviewing the sufficiency of preventive measures against a severe accident.

The lessons in category 2 are those learned from reviewing the adequacy of the responses to this severe accident.

The lessons in category 3 are those learned from reviewing the adequacy of the emergency responses to the nuclear disaster in this accident.

The lessons in category 4 are those learned from reviewing the robustness of the safety infrastructure established at the nuclear power station.

The lessons in category 5 are those learned from reviewing the thoroughness in safety culture while summing up all the lessons.

(Lessons in category 1) Strengthen preventive measures against a severe accident

(1) Strengthen measures against earthquakes and tsunamis

The earthquake was an extremely massive one caused by plurally linked seismic centers. As a result, in Fukushima Dai-ichi Nuclear Power Station, acceleration response spectra of seismic ground motion observed on the base mat exceeded the acceleration response spectra of the design basis seismic ground motion in a part of the periodic band. Although damage to external power supply was caused by the earthquake, no damage caused by the earthquake to systems, equipment and devices important for nuclear reactor safety at nuclear reactors has been

confirmed. However, further investigation should be conducted as the detailed status remains unknown.

The tsunamis which hit Fukushima Dai-ichi Nuclear Power Station were 14-15m high, substantially exceeding the assumed height by the design of construction permit or subsequent evaluation. The tsunamis severely damaged seawater pumps, etc., causing failure to secure emergency diesel power supply and reactor cooling function. The procedural manual does not assume the flooding of tsunami but stipulates measures against a backrush. The assumption on the frequency and height of tsunamis was insufficient, and therefore, measures against large-scale tsunamis were not adequately prepared.

From the viewpoint of design, the range of an active period for a capable fault which needs to be considered in the seismic design for a nuclear power plant is considered within 120,000-130,000 years (50,000 years in the old guideline). The recurrence of large-scale earthquakes is expected to be appropriately considered. Moreover, residual risks are required to be considered. Compared with the design against earthquake, the design against tsunamis has been performed based on tsunami folklore and indelible traces of tsunami, not on the adequate consideration of the recurrence of large-scale earthquakes in relation to a safety goal to be attained.

Reflecting on the above issues, we will consider handling of plurally linked seismic centers as well as strengthening quake resistance of external power supply. Regarding tsunamis, from the viewpoint of preventing a severe accident, we will assume appropriate frequency and adequate height of tsunamis in consideration of a sufficient recurrence period for attaining a safety goal. Then, we will perform a safety design of structures, etc. to prevent the impact of flooding in the site caused by the adequately assumed high tsunamis in consideration of destructive power of tsunamis. While fully recognizing a possible risk caused by the flooding into buildings of tsunamis exceeding the ones assumed in design, we will take measures from the viewpoint of defense-in-depth, to sustain the important safety functions by considering flooded sites and the huge destructive power of run-up waves.

(2) Secure power supply

A major cause for this accident was a failure in securing the necessary power supply. This was caused by the facts that power supply sources were not diversified from the viewpoint of overcoming vulnerability related to failures derived from a common cause by an external event, and that the installed equipment such as a switchboard did not meet the specifications that could withstand a severe environment such as flooding. Moreover, it was caused by the facts that

battery life was short compared with the time required for restoration of AC power supply and that a time goal required for the recovery of external power supply was not clear

Reflecting on the above facts, Japan will secure power supply at sites for a longer time determined as a goal even in severe circumstances of emergency through diversification of power supply sources by preparing various emergency power supply sources such as air-cooled diesel generators, gas turbine generators, etc., deploying power-supply cars and so on, as well as equipping switchboards, etc. with high environmental tolerance and generators for battery charge, and so on.

(3) Secure robust cooling functions of reactor and PCV

In this accident, the final place for release of heat (the final heat sink) was lost due to the loss of function of seawater pumps. Although the reactor cooling function of water injection was activated, core damage could not be prevented due to drain of water source for injection and loss of power supplies, etc., and PCV cooling function also did not run well. Thereafter the difficulties remained in reducing the reactor pressure and, moreover, in water injection after the pressure was reduced, because the water injection line into a reactor by the use of heavy machinery such as a fire engine, etc. had not been developed as a measure for accident management. In this manner, the loss of cooling functions of reactors and PCVs have aggravated the accident.

Reflecting on the above issues, Japan will secure robust alternative cooling functions of reactors and PCVs by securing alternative final heat sinks for a durable time. This will be pursued through such means as diversifying alternative water injection functions, diversifying and increasing sources for injection water, and introducing an air-cooling system.

(4) Secure robust cooling functions of spent fuel pools

In the accident, the loss of power supplies caused the failure to cool the spent fuel pools, requiring actions to prevent a severe accident due to the loss of cooling functions of spent fuel pools in parallel with responses to the accident of the reactors. So far, a risk of a major accident of a spent fuel pool had been deemed small compared with a core event and measures such as alternative water injection into a spent fuel pool, etc. were not considered.

Reflecting on the above issues, Japan will secure robust cooling measures by introducing

alternative cooling functions such as a natural circulation cooling system or an air-cooling system, as well as alternative water injection functions in order to maintain cooling of spent fuel pools even in case of the loss of power supplies.

(5) Thorough accident management (AM) measures

The accident reached the level of so called a severe accident. The accident management measures had been introduced to Fukushima NPS to minimize the possibilities of severe accidents and to mitigate consequences in case of severe accidents. However, looking at the situation of the accident, although some part of the measures functioned, such as alternative water injection from the fire extinguishing water system to the reactor, the rest did not fulfill their roles in various responses including ensuring the power supplies and the reactor cooling function, and the measures turned out to be inadequate. In addition, the accident management measures are basically regarded as voluntary efforts by operators, not legal requirements, and so the development of these measures lacked strictness. Moreover, the guideline of accident management has not been reviewed since its development in 1992, and has not been strengthened or improved.

Reflecting on the above issues, we will change the accident management measures from the voluntary safety efforts of operators to legal requirements, and develop the accident management measures to prevent severe accidents, including the review of the design requirements as well, by utilizing a probabilistic safety assessment approach.

(6) Response to issues concerning the siting with more than one reactor

The accident occurred at more than one reactor at the same time, and the resources needed for accident response had to be dispersed. Moreover, as two reactors shared the facilities , the physical distance between the reactors was small and so on., the development of the accident occurred at one reactor affected the emergency responses at the nearby reactor.

Reflecting on the above issues, Japan will take measures to ensure that emergency operation at a reactor where an accident occurs can be conducted independently from operation at other reactors if one power station has more than one reactor. Also, Japan will assure the engineering independence of each reactor to prevent accident at one reactor from affecting nearby reactors. In addition, Japan will promote the development of a structure that enables each unit to carry out accident response independently, by choosing a responsible person for ensuring nuclear

safety of each unit.

(7) Consideration on placements of NPS in basic design

Since the spent fuel storage pools were placed on the higher part of the reactor buildings, response to the accident became difficult. In addition, contaminated water from the reactor buildings reached the turbine buildings, which means that the spread of contaminated water to other buildings has not been prevented. .

Reflecting on the above issues, Japan will promote the adequate placement of facilities and buildings at the stage of basic design of placement of NPS, etc. in order to further ensure to conduct robust cooling, etc. and prevent expansion of impacts of the accident in consideration of occurrence of serious accidents. In this regard, as for existing facilities, additional response measures will be taken to add equivalent level of function to them.

(8) Ensuring the water tightness of essential equipment facilities

One of the causes of the accidents is that the tsunami flooded many essential equipment facilities including component cooling seawater pump facilities, the emergency diesel generators, switchboards, etc., impairing power supply and making it difficult to ensure cooling systems.

Reflecting on the above issues, in terms of achieving the target safety level, Japan will ensure the important safety functions even in case of tsunamis greater than ones expected by the design or floods hitting facilities located near rivers. In concrete terms, Japan will ensure the water-tightness of important equipment facilities by installing watertight doors in consideration of the destructive power of tsunami and flood, blocking flood route such as pipes, and the installation of drain pumps, etc.

(Lessons in Category 2) Enhancement of response measures against severe accidents

(9) Enhancement of prevention measures of hydrogen explosion

In the accident, an explosion probably caused by hydrogen occurred at the reactor building in Unit 1 at 15:36 on March 12, 2011, and at the reactor in Unit 3 at 11:01 on March 14 as well. In addition, an explosion that was probably caused by hydrogen occurred at the reactor building in

Unit 4 around 06:00 on March 15, 2011. While effective measures could not be taken from the first explosion, consecutive explosions occurred. These hydrogen explosions aggravated the accident. A BWR inactivates a PCV and has a flammability control system in order to maintain the soundness of a PCV against design basis accidents. However, it was not assumed that an explosion in reactor buildings would be caused by hydrogen leakage, and as a matter of course, hydrogen measures for reactor buildings were not taken.

Reflecting on the above issues, we will enhance measures for preventing a hydrogen explosion such as the installation of a flammability control system to function in the event of a severe accident in reactor buildings, for the purpose of discharging or reducing hydrogen in reactor buildings, in addition to a hydrogen measures in a PCV.

(10) Enhancement of containment venting system

In the accident, there were problems in operability of the containment venting system in the face of severe accident. Also, as the function of removing released radioactive material in the containment venting system was insufficient, therefore, the system was not effective as accident management measures. In addition, the independence of the vent line was insufficient and it may have had an adverse effect on other parts through connecting pipes, etc.

Reflecting on the above issues, we will enhance a containment venting system by improving its operability, ensuring the independence, and strengthening the function of removing released radioactive material.

(11) Improvement of accident response environment

In the accident, the radiation dosage increased in the main control room and operators could not enter the room temporarily and the habitability in the main control room has decreased. It still remains difficult to work in the room for an extended period. Moreover, at the on-site emergency station, a control tower of all emergency measures on the site, the accident response activities were affected by the increase of radiation dosage and worsening of the communication environment and lighting.

Reflecting on the above issues, we will enhance the accident response environment that enables continued accident response activities even in case of severe accidents through measures such as strengthening radiation shielding in the control rooms and the emergency centers, enhancing the

exclusive ventilation and air conditioning system on site, as well as strengthening related equipment including communication and lightening systems without use of AC power supply.

(12) Enhancement of the radiation exposure management system at accident

In the accidents, although adequate radiation management became difficult as many of the personal dosimeters and dose reading devices became unusable due to submergence in seawater, personnel engaged in radiation work had to work on site. In addition, measurements of concentration of radioactive material in air were delayed, and as a result the risk of internal exposure increased.

Reflecting on the above issues, we will enhance the radiation exposure management system at accident by storing the adequate amount of personal dosimeters and protection suits and gears for accident, developing the system to be able to expand radioactive management personnel at accident and improving the structure and equipment to measure radiation dose of radiation workers promptly.

(13) Enhancement of training responding to severe accident

Effective training to respond to accident restoration at nuclear power plants and adequately work and communicate with relevant organizations in the wake of severe accidents was not sufficiently implemented up to now. For example, it took time to establish communication between the emergency office inside of the power station, the Nuclear Emergency Response Headquarters and the Local Headquarters and also to build a collaborative structure with the Self Defense Forces, the Police, Fire Authorities and other organizations which played important roles in responding to the accident. Adequate training could have prevented these problems in advance.

Reflecting on the above issues, we will enhance training to respond to severe accidents by promptly building a structure for responding to accident restoration, identifying situations within and outside power plants, facilitating the gathering of human resources needed for securing the safety of residents and effectively collaborating with relevant organizations.

(14) Enhancement of instrumentation to identify the status of reactors and PCVs

Because the instrumentation of reactors and PCVs did not function sufficiently during the

severe accident, it was difficult to promptly and adequately obtain important information to identify the development of the accident such as the water levels and the pressure of reactors, and the source and amount of released radioactive materials.
In respond to the above issues, we will enhance the instrumentation of reactors and PCVs, etc. to enable it to effectively function even in the wake of severe accidents.

(15) Central control of emergency supplies and equipment and setting up rescue team

Logistic support has been diligently provided by those responding to the accident and supporting affected people with supplies and equipment gathered mainly at J Village. However, because of the damage from the earthquake and tsunami in the surrounding areas shortly after the accident, we could not promptly and sufficiently mobilize rescue teams to help provide emergency supplies and equipment and support accident control activities. This is why the on-site accident response did not sufficiently function.

Reflecting on the above issues, we will introduce systems for centrally controlling emergency supplies and equipment and setting up rescue teams for operating such system in order to provide emergency support smoothly even under harsh circumstances.

(Lessons in Category 3) Enhancement of nuclear emergency response

(16) Response to combined emergency of both large-scale natural disaster and prolonged nuclear accident

We had tremendous difficulty in communication and telecommunications, mobilizing human resources, procuring supplies and others when addressing the nuclear accident that coincided with a massive natural disaster. As the nuclear accident has been prolonged, some measures such as evacuation of residents, which was originally assumed to be a short-term measure, have been forced to be extended.

Reflecting on the above issues, we will prepare a structure and an environment where appropriate communication tools and devices and channels to procure supplies and equipment will be ensured in coincidental combined emergency of both massive natural disaster and prolonged nuclear accident. Also, assuming a prolonged nuclear accident, we will enhance emergency response preparedness including effective mobilization plans to gather human resources in various fields who are involved with the accident response and sufferers support.

(17) Reinforcement of environment monitoring

Currently, local governments are responsible for environmental monitoring in an emergency. However, appropriate environmental monitoring was not possible immediately after the accident because equipment and facilities for environmental monitoring owned by local governments were damaged by the earthquake and tsunami and the relevant individuals had to evacuate from the Off-site Center Emergency Response Center. To make up for this, MEXT has conducted environmental monitoring in cooperation with relevant organization.

Reflecting on the above issues, the Government will develop a structure where the Government will implement environmental monitoring in a reliable and well-planned manner in emergency.

(18) Establishment of clear division of labor between relevant central and local organizations

Communication between local and central offices as well as with other organizations was not sufficiently achieved due to lack of communication tools immediately after the accident and also roles and responsibilities of each side were not clearly defined. Specifically speaking, responsibility and authority were not clearly defined in the relationship between the NERHQs Nuclear Emergency Response Headquarters and Local NERHQs Headquarters, between the Government and TEPCO, between the Head Office of TEPCO and NPS on site, as well as among the relevant organizations in the Government. Especially, communication was not sufficient between the government and the main office of TEPCO at the initial point of the accident.

Reflecting on the above issues, we will review and defining roles and responsibilities of relevant organizations including the NERHQs, clearly specify roles, responsibilities and tools in their communication and improve institutional mechanisms.

(19) Enhancement of communication relevant to the accident

Communication to residents in the surrounding area was difficult because communication tools were damaged by the large-scale earthquake. The subsequent information to residents in the surrounding area and local governments was not always provided in a timely manner. The impact of radioactive materials on health and the radiological protection guideline of the ICRP, which are the most important information for residents in the surrounding area and others, were

not sufficiently explained. We have focused on publicizing mainly accurate facts to the citizens and have not sufficiently present future outlook on risk factors, which sometimes gave rise to concerns about future prospects.

Reflecting on the above issues, we will reinforce adequate provision of information on the accident status and response and appropriate explanation about the radiation effect to the residents in the vicinity. Also, we will keep in mind that the future outlook on risk factors is included in the information delivered while incidents are ongoing status.

(20) Enhancement of response to assistance by other countries and communication to the international community

The Japanese Government could not appropriately respond to the assistance offered by other countries across the world because there was not a specific structure in the Government to accommodate such assistance offered by other countries with the domestic needs. Communication with the international community including prior notification to neighboring countries and areas on the discharge of water with low-level radioactivity to the sea was not always sufficient.

Reflecting on the above-mentioned issues, the Japanese Government will contribute to developing a global structure for effective response, by cooperating with the international community, for example, developing a list of supplies and equipment for effective response to any accident; specifying contact points of each country in advance in case of accident; and enhancing information sharing framework through improvement of international notification system; providing faster and more accurate information, which makes it possible to take measures based upon scientific evidence.

(21) Adequate identification and forecast of the effect of released radioactive materials

The system for Prediction of Environmental Emergency Dose Information (SPEEDI) could not make proper prediction on the effect of radioactive materials as originally designed, due to the lack of information on the release source. Even under such restricted conditions, it should have been utilized, as a reference of evacuation activities and other purposes by presuming diffusion trend of radioactive materials under a certain assumption. Although the results generated by SPEEDI are now being disclosed, it should have been done so from the initial stage.

The Japanese Government will improve the instrumentation and facilities to ensure release source information can be securely obtained. Also, it will develop a plan to effectively utilize SPEEDI and other systems to address various emergency cases and disclose the data and results from SPEEDI, etc. from the beginning of these cases.

(22) Clear definition of widespread evacuation area and radiological protection guideline in nuclear emergency

Immediately after the accident, Evacuation Area and In-house Evacuation Area were established, and cooperation of residents in the vicinity, local governments, police and relevant organizations facilitated the fast implementation of evacuation and "Stay In-house" instruction. As the accident prolonged, the residents had to be evacuated or stay in-houses for a long period. Subsequently, however, guidelines of ICRP and IAEA, which have not been used before the accident, were decided to be used when establishing Deliberate Evacuation Area and Emergency Evacuation Prepared Area. The size of the protection area defined after the accident was considerably larger than 8 to 10 km radius from the NPS, which was defined as the area where focused protection measures should be taken.
Based on the experience gained in the accident, the Japanese Government will make much more efforts to clearly define the evacuation areas and guidelines of radiological protection in nuclear emergency.

（Lessons in Category4) Reinforcement of safety infrastructure

(23) Reinforcement of safety regulatory bodies

Governmental organizations have different responsibilities for securing nuclear safety. For example, NISA of METI is responsible for safety regulation as a primary regulatory body, the Nuclear Safety Commission of the Cabinet Office is responsible for regulation monitoring of the primary governmental body, and relevant local governments and ministries are in charge of emergency environmental monitoring. This is why it was not clear who has the primary responsibility for ensuring citizens' safety in an emergency. Also, we cannot deny that the existing organizations and structures made mobilization of capabilities difficult to promptly respond to such a large-scale nuclear accident.

Reflecting on the above issues, the Japanese Government will separate NISA from METI, and starting to review implementing frameworks, including NSC and relevant ministries, for

administration on nuclear safety regulation and for environmental monitoring.

(24) Establishment and reinforcement of legal structure, criteria and guidelines

Reflecting on this accident, various challenges are identified regarding the establishment and reinforcement of legal structures on nuclear safety and nuclear emergency preparedness and response, and related criteria and guidelines. Also, based on the experiences of this nuclear accident, many issues would be identified as ones to be reflected in the standards and guidelines of IAEA.

Therefore, the Japanese Government will review and improve the legal structures of nuclear safety and nuclear emergency preparedness and response, and related criteria and guidelines. During this process, it will reevaluate measures taken against age-related degradation of the existing facilities, from the viewpoint of structural reliability as well as necessity for responding to new knowledge and expertise including the progress of system concepts. Also, the Japanese Government will clarify technical requirements based on new laws and regulations, and new findings and knowledge for facilities already approved and licensed, in other words, the status of back-retrofitting under laws and regulations. The Japanese Government will make every effort to contribute to improving safety standards and guidelines of the IAEA by providing related data.

(25) Human resources for nuclear safety and nuclear emergency preparedness and response

All the experts on severe accidents, nuclear safety, nuclear emergency preparedness and response, risk management and radiation medicine should get together to address such an accident by making use of the latest and best knowledge and experience. Also, it is extremely important to develop human resources in the fields of nuclear safety and nuclear emergency preparedness and response in order to ensure mid-and-long term efforts on nuclear safety as well as to restore from the current accident.

Reflecting on the above-mentioned issues, the Japanese Government will enhance human resource development in the activities of nuclear operators and regulatory organizations along with focusing on education of nuclear safety, nuclear emergency preparedness and response, crisis management and radiation medicine at educational organizations.

(26) Securing independency and diversity of safety system

Although multiplicity was valued in order to ensure reliability of safety systems so far, avoidance of common cause failures has not been carefully considered and independency and diversity have not been sufficiently secured.

Therefore, the Japanese Government will ensure the independency and diversity of safety systems so that common cause failures can be adequately addressed and the reliability of safety functions can be further improved.

(27) Effective use of probabilistic safety assessments (PSA) in risk management

PSA has not always been effectively utilized in the overall reviewing processes and efforts of risk reduction at nuclear power plants. While quantitative evaluation of risks of quite rare events such as large-scale tsunami is difficult and may be associated with uncertainty even in PSA, we have not made sufficient efforts to improve reliability of the assessment by explicitly identifying such uncertainty of the risks.

Considering knowledge and experiences of uncertainties, the Japanese Government will further actively and swiftly utilize PSA and developing improvement of safety measures including effective accident management measures based on PSA.

5. Raise awareness of safety culture

(28) Raise awareness of safety culture

All those involved with nuclear energy should be equipped with a safety culture. “Nuclear safety culture” is stated as “A safety culture that governs the attitudes and behavior in relation to safety of all organizations and individuals concerned must be integrated in the management system.” (IAEA, Fundamental Safety Principles, SF-1, 3.13) Learning this message and putting it into practice is the starting point, duty and responsibility of those who are involved with nuclear energy. Without a safety culture, there will be no constant improvement of nuclear safety.

Reflecting on the current accident, the nuclear operators whose organization and individuals have primary responsibility for securing safety should look at every knowledge and findings, and make sure whether or not they indicate the vulnerability of a plant. They should reflect as to

whether they have been serious in introducing appropriate measures for improving safety, when they are not confident that risks concerning public safety of the plant remain low.

Also, organizations or individuals involved in national nuclear regulations, as ones responsible for ensuring nuclear safety for the people, should reflect whether they have been serious in addressing new knowledge in a responsive and prompt manner, not leaving any doubt in terms of safety.

Reflecting on this viewpoint, we establish safety culture, by going back to the basics that pursuing defense-in-depth is essential for ensuring nuclear safety, constantly learning professional knowledge on safety, and maintaining an attitude for trying to identify weaknesses as well as rooms for improvement for safety.

## 13. Conclusion

The nuclear accident that occurred in Fukushima Nuclear Power Station (NPS) on March 11, 2011 was caused by an extremely massive earthquake and tsunami rarely seen in history, and resulted in an unprecedented serious accident that extended over multiple reactors simultaneously. Japan is extending its utmost efforts to confront and overcome this difficult accident.

In particular, at the accident site, people engaged in the work have been making every effort under severe conditions for the restoration from the accident. It is impossible to resolve the situation without these contributions. The Japanese Government is determined to make its utmost effort to support the people engaged in the work.

We are taking very seriously the fact that the accident, triggered by a natural disaster of an earthquake and tsunami, became a severe accident due to such causes as the losses of power and cooling functions, and that consistent preparation for severe accidents was insufficient. In light of the lessons learned from the accident, Japan has recognized that a fundamental revision of its nuclear safety preparedness and response is inevitable.

As a part of this effort, Japan will promote the “Plan to Enhance the Research on Nuclear Safety Infrastructure” while watching the status of the process of restoration from the accident. This plan is intended to promote, among other things, research to enhance preparedness and response against severe accidents. Through international cooperation, and to work to lead the results

achieved for the improvement of global nuclear safety.

At the same time, it is necessary for Japan to conduct national discussions on whole concept of the nuclear power generation while disclosing actual costs of nuclear power generation including for securing safety.

Japan will update information on the accident and lessons learned from it in line with the future process of restoration from the accident and with further investigation and will continue to provide such information and lessons learned to the International Atomic Energy Agency as well as countries around the world.

Moreover, we feel encouraged by the support towards restoration from the accident received from many countries around the world to which we express our deepest gratitude, and we would sincerely appreciate continued support from the IAEA and countries around the world.

We are prepared to confront much difficulty towards restoration from the accident, and also confident that we will be able to overcome this accident by uniting the wisdom and efforts of not only Japan, but also the world.

Location of NPSs in Tohoku area

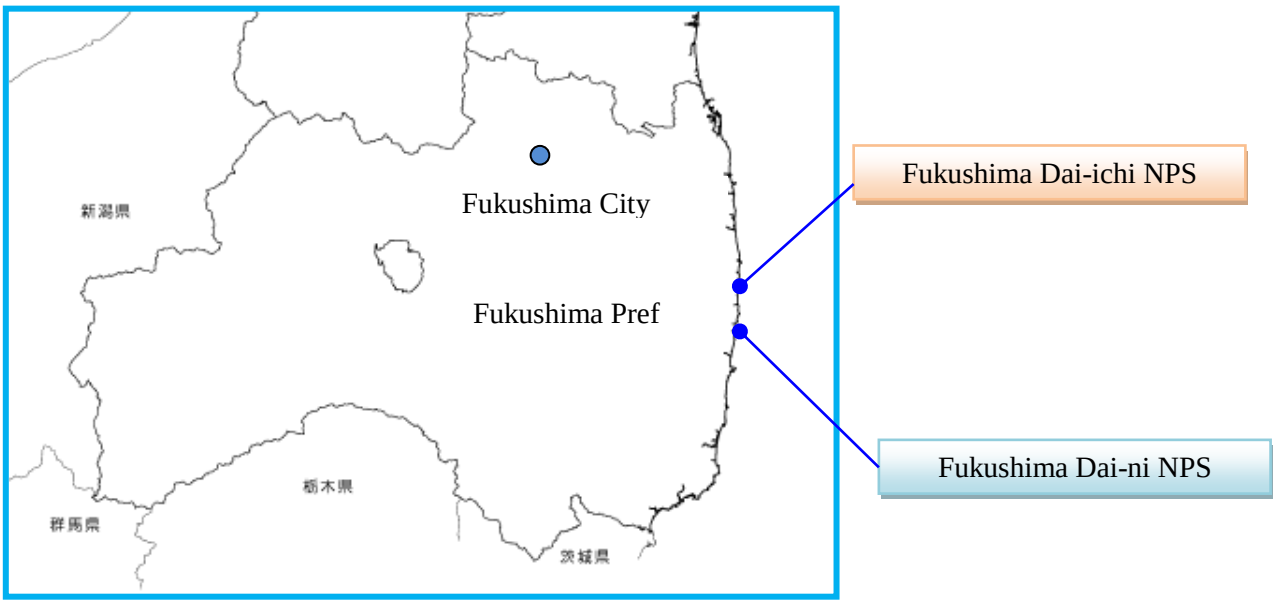


Location of Fukushima NPS

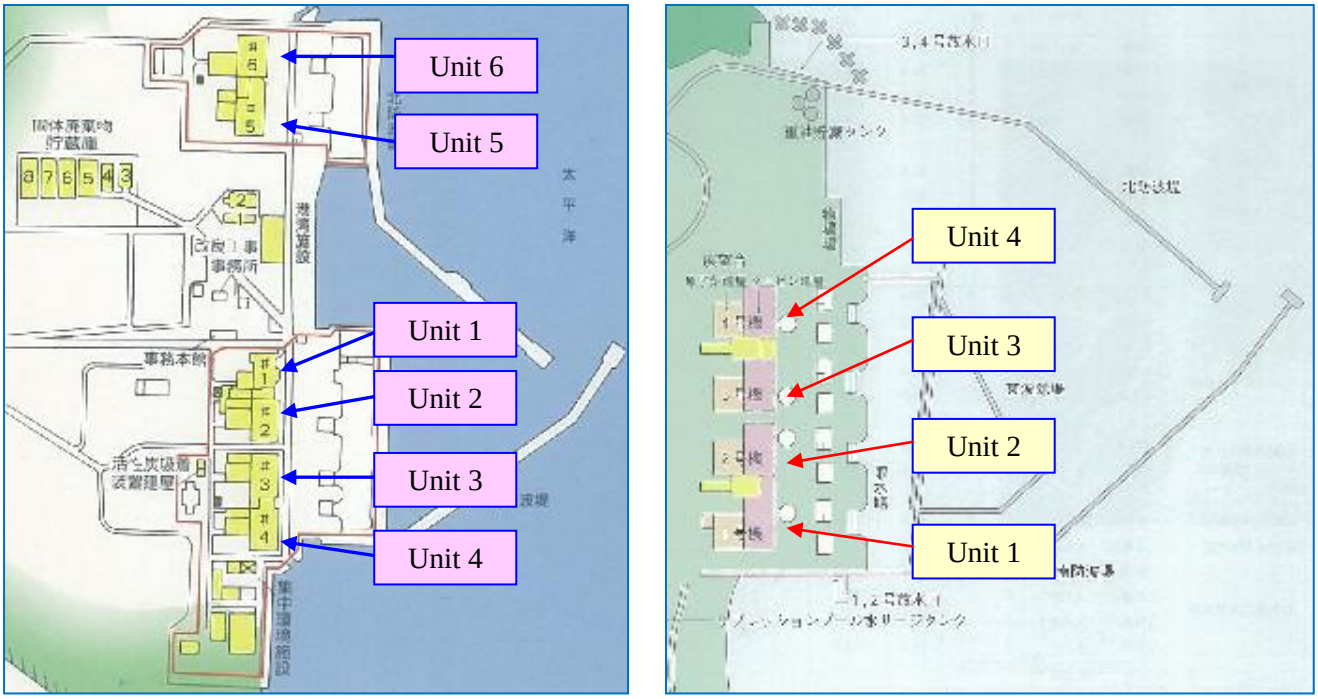


Layout of Fukushima Dai-ichi NPS and Fukushima Dai-ni NPS

Generation Facilities of Fukushima Dai-ichi NPS

| | Unit 1 | Unit 2 | Unit 3 | Unit 4 | Unit 5 | Unit 6 |
|---|---|---|---|---|---|---|
| Electric Output (MWe) | 460 | 784 | 784 | 784 | 784 | 1100 |
| Commercial Operation | 1971/3 | 1974/7 | 1976/3 | 1978/10 | 1978/4 | 1979/10 |
| Reactor Model | BWR3 | BWR4 | | | BWR5 | |
| PCV Model | Mark-1 | | | | | Mark-2 |
| Number of Fuel Assembly in the Core | 400 | 548 | 548 | 548 | 548 | 764 |

Generation Facilities of Fukushima Dai-ni NPS

| | Unit 1 | Unit 2 | Unit 3 | Unit 4 |
|---|---|---|---|---|
| Electric Output (MWe) | 1100 | 1100 | 1100 | 1100 |
| Commercial Operation | 1982/4 | 1984/2 | 1985/6 | 1987/8 |
| Reactor Model | BWR5 | | | |
| PCV Model | Mark-2 | Mark-2 Advance | | |
| Number of Fuel Assembly in the Core | 764 | 764 | 764 | 764 |

Status of Each Unit of Fukushima Dai-ichi NPS (As of May 31)

| Unit No. | Unit 1 | Unit 2 | Unit 3 | Unit 5 | Unit 6 |
|---|---|---|---|---|---|
| Situation of water injection to reactor | Injecting fresh water via the Water Supply Line. Flow rate of injected water : 6.0 $m^3$/h | Injecting fresh water via the Fire Extinguish and Water Supply Line. Flow rate of injected water: 7.0$m^3$/h(via the Fire Protection Line), 5.0$m^3$/h(via the Feedwater Line) | Injecting fresh water via the Water Supply Line. Flow rate of injected water : 13.5 $m^3$/h | Water injection is unnecessary as cooling function of the reactor cores are in normal operation. | |
| Reactor water level | Fuel range A : Off scale Fuel range B : -1,600mm | Fuel range A : -1,500mm Fuel range B : -2,150mm | Fuel range A:-1,850mm Fuel range B:-1,950mm | Shut down range measurement 2,164mm | Shut down range measurement 1,904mm |
| Reactor pressure | 0.555MPa g(A) 1.508MPa g(B) | -0.011MPa g (A) -0.016MPa g (B) | -0.132MPa g (A) -0.108MPa g (B) | 0.023 MPa g | 0.010 MPa g |
| Reactor water temperature | (Collection impossible due to low system flow rate) | | | 83.0°C | 24.6 °C |
| Temperature related to Reactor Pressure Vessel (RPV) | Feedwater nozzle temperature: 114.1 °C Temperature at the bottom head of RPV: 96.8 °C | Feedwater nozzle temperature: 111.5 °C Temperature at the bottom head of RPV: 110.6 °C | Feedwater nozzle temperature: 120.9 °C Temperature at the bottom head of RPV: 123.2 °C | (Monitoring water temperature in the reactor.) | |
| D/W Pressure, S/C Pressure | D/W: 0.1317 MPa abs S/C: 0.100 MPa abs | D/W: 0.030 MPa abs S/C: Off scale | D/W: 0.0999 Mpa abs S/C: 0.1855 MPa abs | - | |
| Status | We are working on ensuring the reliability of cooling function by installing temporary emergency diesel generators and sea water pumps as well as receiving electricity from the external power supplies in each plant. | | | | |

# I. Introduction

The Tohoku District - off the Pacific Ocean Earthquake and tsunami caused by the earthquake attacked the Fukushima Dai-ichi and Fukushima Dai-ni Nuclear Power Stations (hereinafter referred to as Fukushima NPS) of Tokyo Electric Power Co. (TEPCO) at 14:46 on March 11, 2011 (JST, the same shall apply hereinafter) and a nuclear accident followed at an unprecedented scale and over a lengthy period

For Japan, the situation has become extremely severe since countermeasures to deal with the nuclear accident have had to be carried out along with dealing with the broader disaster caused by the earthquake and tsunami.

This nuclear accident has turned to be a major challenge for Japan, and Japan is now responding to the situation, with the relevant domestic organizations working together, and with support from many countries around the world. Japan also takes the fact very seriously and with remorse that this accident incidents has raised concerns around the world about the safety of nuclear power generation. And above all we feel sincere regret for the causing the discharge of radioactive materials to the people all over the world

Currently, Japan is dealing with the issues and working towards restoration from the accident utilizing accumulated experience and knowledge. It is Japan's responsibility to share correct and precise information with the world continuously in terms of what happened at Fukushima NPS, including details about how the events progressed, and how Japan has been working to restore from the accidents. Japan also recognizes its responsibility to inform the world of the lessons it has learned from this process.

This report is prepared based on the recognition mentioned above, as the report from Japan for the International Atomic Energy Agency (IAEA) Ministerial Conference on Nuclear Safety which is convened in June 2011.

The Government-TEPCO Integrated Response Office is engaged in working toward restoration from the accidents under the supervision of Mr.Banri Kaieda, the Minister of Economy, Trade and Industry in conjunction with and joining forces with the Nuclear and Industrial Safety Agency, and TEPCO. Preparation of this report was carried out by the Government Nuclear Emergency Response Headquarters in considering the approach taken by the Government-TEPCO Integrated Response Office toward restoration and by hearing the

opinions from external experts. The work has been managed as a whole by Mr.Goshi Hosono, special advisor to the Prime Minister, who was designated by the Prime Minister in his capacity as General Manager of the Government Nuclear Emergency Response Headquarters.

This report is a preliminary accident report, and represents a summary of the evaluation of the accident and the lessons learned to date based on the facts gleaned about the situation obtained so far. In terms of the range of the summary, technical matters related to nuclear safety and nuclear emergency preparedness and responses at this moment are centered on, and issues related to compensation for nuclear damage and the wider societal effects and so on are not included.

On top of preparing this report, the Government has established "Investigation Committee on the Accident at the Fukushima Nuclear Power Stations" (hereinafter referred to as "the Investigation Committee") in order to provide an overall verification of the utility of countermeasures being taken against the accidents that have occurred at the Fukushima NPS. In the Investigation Committee, independence from Japan's existing nuclear energy administration, openness to the public and international community, and comprehensiveness in examining various issues related not only to technical elements but also to institutional aspects, are stressed. These concepts are used as the base to strictly investigate all activities undertaken so far, including activities by the Government in terms of countermeasures against accident. The contents of this report will also investigated by the Investigation Committee, and the progress of the investigation activities will be released to the world.

Japan's basic policy is to release the information about this accident with a high degree of transparency. In terms of the preparation of this report under this policy, we have paid attention to providing as accurately as possible an exact description of the facts of the situation, together with an objective evaluation of countermeasures against the accident, providing a clear distinction between known and unknown matters. Factual descriptions are based on the things that were found by May 31, this year.

Japan intends to exert all its power to properly tackle the investigation and analysis of this accident, and to continue to provide information on its policy to both the IAEA and to the world as a whole.

## II. Overview of Nuclear Safety Regulations and Other Regulatory Framework in Japan before the Accident

This Chapter provides an overview of the legislative and regulatory framework for nuclear safety and nuclear emergency preparedness and responses.

### 1. Legislative and regulatory framework for nuclear safety

#### (1) Main laws and regulations

In the legislative framework for nuclear safety in Japan, in respect of the standards of IAEA, under the Atomic Energy Basic Act (Act No. 186 of 1955), which is at the top of the framework and defines basic philosophy for utilization of nuclear energy, the Act on the Regulation of Nuclear Source Material, Nuclear Fuel Material and Reactors (Act No. 166 of 1957; hereinafter referred to as the "Reactor Regulation Act") which provides for safety regulation by the Government and obligations of the operators, the Law for Prevention of Radiation Hazards due to Radioisotopes, etc., the Electricity Business Act, and the Act on Special Measures Concerning Nuclear Emergency, among others, have been put in place (Figure II-1-1). Other than these, the Nuclear Safety Commission (hereinafter referred to as "the NSC Japan") developed the guidelines to be used in the evaluation of the safety review and assessment conducted by the regulatory authority. These guidelines are also used when the regulatory authority conducts safety review and assessment, for the efficiency and facilitation of safety reviews and assessment by the Government (Table II-1-1).

As for dose limits, etc. for occupational exposure, etc., pursuant to the Law for Technical Standards of Radiation Hazards Prevention (Act No. 162 of 1958), the Radiation Review Council established in the Ministry of Education, Culture, Sports, Science and Technology (hereinafter referred to as "MEXT") is to discuss the introduction to Japan of the International Commission on Radiological Protection (ICRP)'s recommendations and to state its views on the policy of relevant Ministries and Agencies on the adoption of the recommendations. Furthermore, if technical standards concerning the prevention of radiation hazards provided for in the laws and regulations such as dose limits to radiation workers are to be established, the government agency having jurisdiction of the laws and regulations in question must consult the Radiation Review Council established in MEXT.

##### 1) The Atomic Energy Basic Act

The Atomic Energy Basic Act prescribes the basic policy of the utilization of nuclear energy as follows: “the research, development and utilization of nuclear energy shall be limited to peaceful purposes, shall aim at ensuring safety, And shall be performed independently under democratic administration, and the results obtained shall be made public so as to actively contribute to international cooperation. ”

2) The Reactor Regulation Act

The Reactor Regulation Act stipulates, for commercial power reactors, the procedures for safety regulation and the licensing criteria for the permission of establishment of a reactor, approval of operational safety regulations, Operational Safety Inspection and decommissioning of a reactor, among others, as regulations necessary for the establishment and operation of a reactor. The act also provides for dispositions such as suspension of operation and license revocation and criminal punishment including imprisonment and fine.

The Ministerial Ordinances and other regulations established under the Reactor Regulation Act are the “Rules for Commercial Nuclear Power Reactors concerning the Installation, Operation, etc.” (Reference 2-1-2) and the “Notice on Dose Limits” (Reference 2-1-2).

3) The Electricity Business Act

The Electricity Business Act, which is applied not only to nuclear power generation but also to thermal and hydraulic power generation, is an act that comprehensively regulates the electricity business in Japan, and provides for the procedures for safety regulation including approval of design and construction method, pre-service inspection and facility periodic inspection for commercial power reactors.

The Ministerial Ordinances an d other regulations which are established under the Electricity Business Act and are related with the safety regulation of nuclear installation are the Rules for the Electricity Business (Reference 2-1-3), the Ordinance of Establishing Technical Requirements for Nuclear Power Generation” (Reference2-1-4), the Ordinance of Establishing Technical Requirements on Nuclear Fuel Material for Power Generation (Reference 2-1-5) and the Technical Requirements on Dose Equivalent, etc. due to Radiation Relating to Nuclear Power Generation Equipment (Reference 2-1-6).

(2) Licensing system

1) Licensing system

a. In establishing a commercial nuclear reactor, one must receive a license by the Minister of Economy, Trade and Industry in accordance with the provisions of the Reactor Regulation Act. When the Minister of Economy, Trade and Industry grants a license, he/she must hear the views of the NSC Japan on the technical competence of establishing and correctly implementing the operation of a reactor, and on whether there is no problem in reactor's emergency response.

b. A person who has obtained the license for reactor establishment (hereinafter referred to as the "licensee of reactor operation") must obtain an approval from the Minister of Economy, Trade and Industry on the construction plan prior to construction based on the provisions of the Electricity Business Act.

c. Regarding the fuel assembly to be loaded into the reactor, its design must be approved by the Minister of Economy, Trade and Industry based on the provisions of the Electricity Business Act.

2) Inspection system

a. In construction of a nuclear facility, the licensee of reactor operation must undergo and pass the pre-service inspection, which is conducted for each construction process by the Minister of Economy, Trade and Industry, based on the provisions of the Electricity Business Act.

b. The fuel assembly to be loaded into the reactor must undergo and pass the fuel assembly inspection conducted by the Minister of Economy, Trade and Industry, based on the provisions of the Electricity Business Act.

c. After commissioning, the licensee of reactor operation must undergo the periodic inspection conducted by the Minister of Economy, Trade and Industry on the pre-determined components that are important in terms of safety.

d. As to the operational safety of the operating facilities, the licensee of reactor operation

must undergo the Operational Safety Inspection conducted by Nuclear Safety Inspector of the Nuclear and Industrial Safety Agency (hereinafter referred to as “NISA”), relegated by the Minister of Economy, Trade and Industry.

e. As for inspection on physical protection, the compliance inspection of physical protection program is conducted in accordance with the provisions of the Reactor Regulation Act,

(3) Government Institutions

The Minister of Economy, Trade and Industry (hereinafter referred to as “METI”) has jurisdiction over nuclear power reactor facility in Japan, and the Law for Establishment of the Ministry of Economy, Trade and Industry clearly stipulates that NISA is the “organization to ensure the safety of nuclear energy,” and it is positioned as a special organization of the Agency for Natural Resources and Energy of METI. NISA has definitive authorities and functions for the safety regulation based on the provisions of the Reactor Regulation Act and the Electricity Business Act. On the other hand,

In concrete terms, the Minister of Economy, Trade and Industry is responsible for the regulatory activities over the nuclear installation such as the license for reactor installment pursuant to the Reactor Regulation Act, and the approval of construction plan and pre-service inspection pursuant to the Electricity Business Act. The Minister of Economy, Trade and Industry relegates these regulatory activities to NISA, which independently makes decisions or may consult its proposed decision with the Minister of Economy, Trade and Industry without involvement of the Agency for Natural Resources and Energy.

The NSC Japan is an organization established under the Cabinet Office, independent from the ministries and agencies involved in the utilization of nuclear power. It supervises and audits the safety regulation implemented by the regulatory bodies from the independent perspective and has the authorities to make recommendations to the regulatory bodies through the Prime Minister, if necessary. Moreover, NISA established the Japan Nuclear Energy Safety Organization (hereinafter referred to as “JNES”) as their technical support organization in October, 2003. JNES conducts a part of inspection of nuclear facilities pursuant to the laws, and provides technical support to the safety review and assessment on the nuclear installations and the consolidation of the safety regulation standard conducted by NISA (Figure II-1-2).

The emergency monitoring is supposed to be carried out by the local governments in the

current Nuclear Emergency Preparedness system, and MEXT is supposed to support the local governments' emergency monitoring activities by mobilizing the emergency monitoring members and devices to dispatch to the site, with the cooperation by the designated public organizations (National Institute of Radiological Sciences and Japan Atomic Energy Agency), etc.

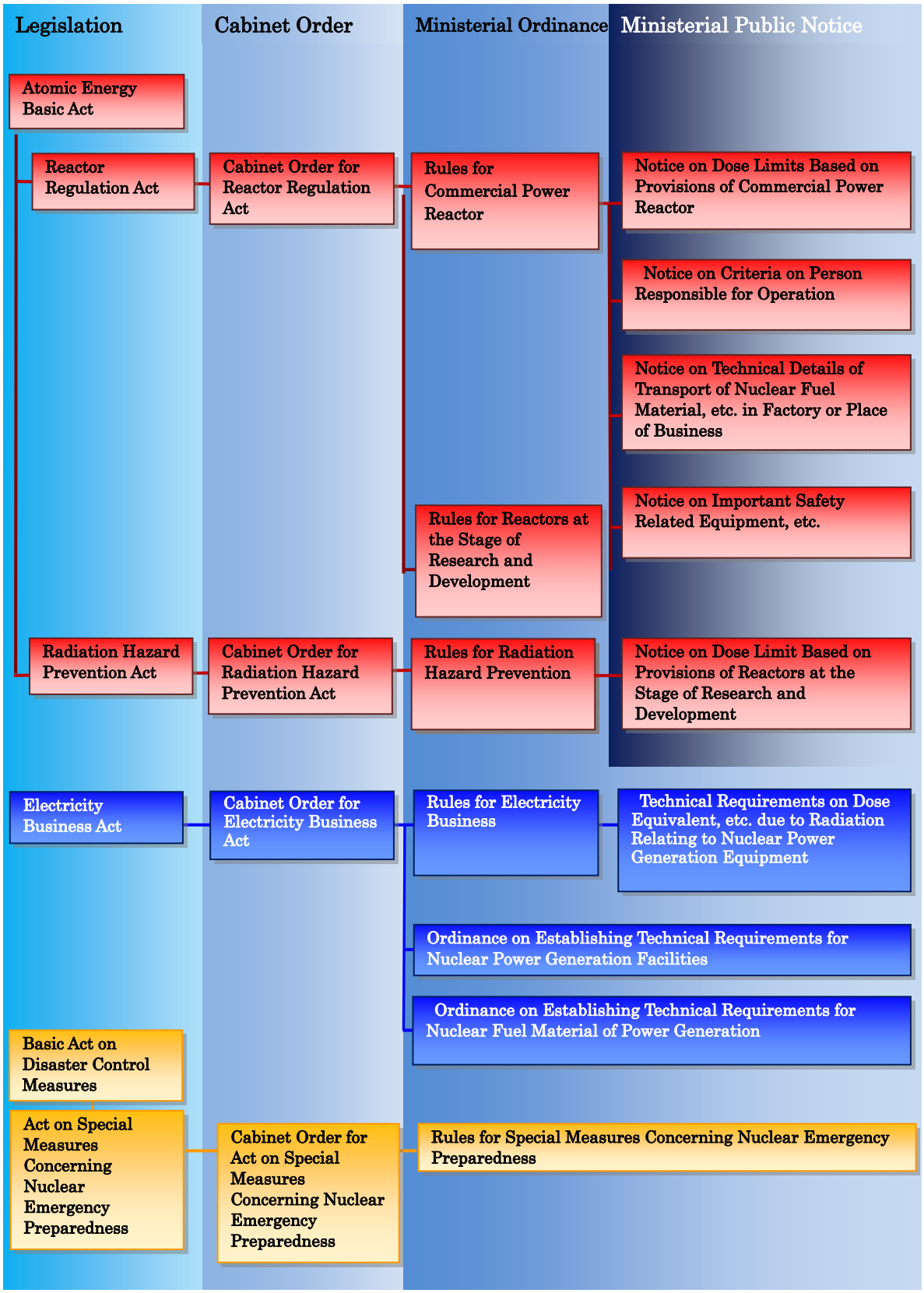


Figure II-1-1 Main Legal Structure of Safety of Nuclear Reactor Facilities in Japan

| | | |
|---|---|---|
| Hazards Prevent | Siting | Regulatory Guide for Reviewing Nuclear Reactor Site Evaluation and Application Criteria |
| | Design | Regulatory Guide for Reviewing Safety Design of Light Water Nuclear Power Reactor Facilities |
| | | Regulatory Guide for Reviewing Classification of Importance of Safety Functions of Light Water Nuclear Power Reactor Facilities |
| | | Regulatory Guide for Reviewing Seismic Design of Nuclear Power Reactor Facilities |
| | | Regulatory Guide for Reviewing Fire Protection of Light Water Nuclear Power Reactor Facilities |
| | | Regulatory Guide for Reviewing Radiation Monitoring in Accidents of Light Water Nuclear Power Reactor Facilities |
| | | Fundamental Policy to be Considered in Reviewing of Liquid Radioactive Waste Treatment Facilities |
| | Safety Evaluation | Regulatory Guide for Evaluating Safety Assessment of Light Water Reactor Facilities |
| | | Regulatory Guide for Evaluating Core Thermal Design of Pressurized Water Cooled Nuclear Power Reactors |
| | | Regulatory Guide for Evaluating Emergency Core Cooling System Performance of Light Water Power Reactors |
| | | Regulatory Guide for Evaluating Reactivity Insertion Events of Light Water Nuclear Power Reactor Facilities |
| | | Regulatory Guide for Evaluating Dynamic Loads on BWR MARK-I Containment Pressure Suppression Systems |
| | | Regulatory Guide for Evaluating Dynamic Loads on BWR MARK-II Containment Pressure Suppression Systems |
| | | Regulatory Guide for Meteorological Observation for Safety Analysis of Nuclear Power Reactor Facilities |
| | Dose Target | Regulatory Guide for the Annual Dose Target for the Public in the Vicinity of Light Water Nuclear Power Reactor Facilities |
| | | Regulatory Guide for Reviewing Evaluation of Dose Target for Surrounding Area of Light Water Nuclear Reactor Facilities |
| | | Guide for Radiation Monitoring of Effluent Released from Light Water Nuclear Power Reactor Facilities |
| Technical Competence | | Regulatory Guide for Examining Technical Competence of License Holder of Nuclear Power |

Table II-1-1 Major Regulatory Guides Specified by the NSC Japan for Power Generating Light Water Reactors

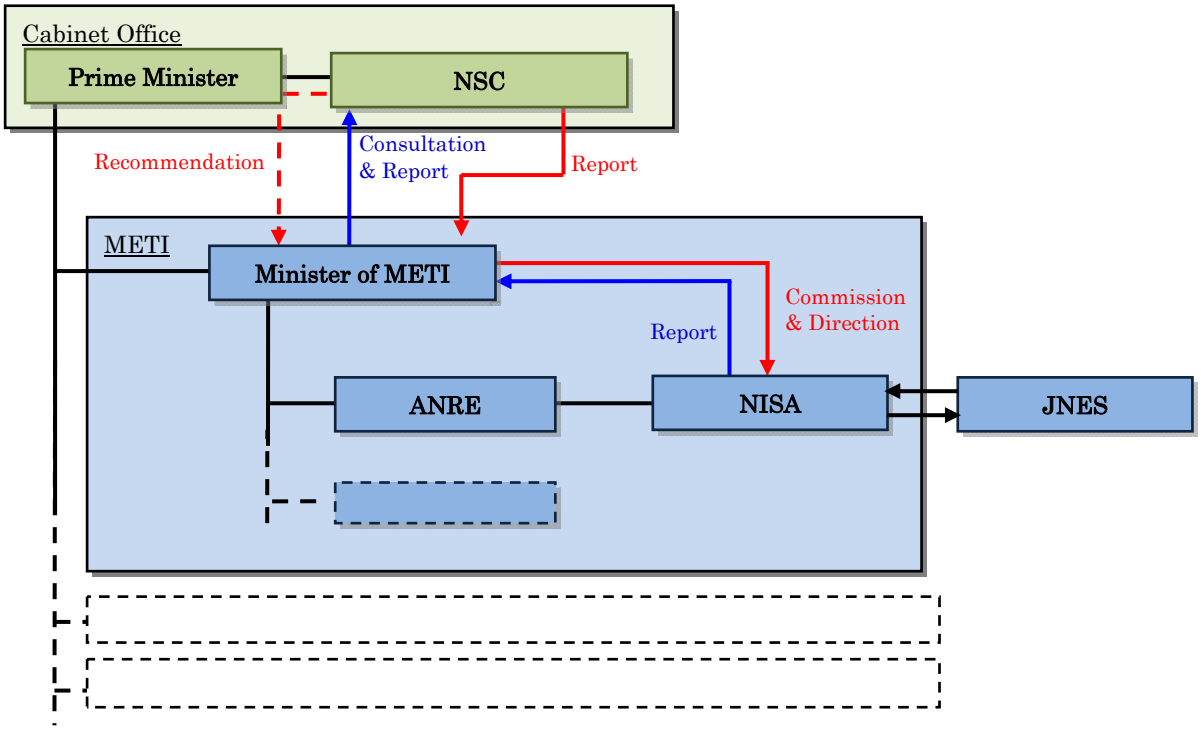


Figure II-1-2 Position of NISA in the Government

2. Mechanism for nuclear emergency responses

(1) The Act on Special Measures Concerning Nuclear Emergency Preparedness

The Nuclear Emergency Preparedness Act (hereafter referred to as “the Nuclear Emergency Preparedness Act”) was established after the criticality accident which occurred at JCO nuclear fuel fabrication facilities in 1999, and stipulates the licensees’ duties on prevention of nuclear disaster, declaration of the Nuclear Emergency and establishment of the Nuclear Emergency Response Headquarters (hereinafter referred to as “NERHQs”), implementation of emergency response measures, measures for restoration from nuclear emergencies, etc.

The Basic Plan for Emergency Preparedness, containing the Basic Act on Disaster Control Measures, forms the basis of the nuclear emergency response and states the measures to prevent occurrence and expansion of nuclear disaster and restore the nuclear disaster. In addition, the Basic Plan for Emergency Preparedness states that the “Regulatory Guide: Emergency Preparedness for Nuclear Facilities”, the prevention guide established by the NSC Japan, shall be fully taken into consideration for technical and special matters (Attachment II).

(2) Nuclear emergency

In a nuclear emergency, closely coordinated response among relevant organizations shall be performed based on the Nuclear Emergency Preparedness Act, and in an emergency at nuclear power reactor facilities, the following responses shall be taken.

1) The licensee of reactor operation shall immediately report to the Minister of Economy, Trade and Industry and heads of local governments when an event stipulated in Article 10 of the Nuclear Emergency Preparedness Act (Specific Event) occurs (Figure II-2-1).
2) The Minister of Economy, Trade and Industry, receiving the notification, shall trigger activities according to the procedure stipulated by law. Staff with expertise in emergency measures shall be sent to local governments on request. The Senior Specialists for Nuclear Emergency Preparedness assigned to work on-site shall collect information and perform duties necessary to smoothly implement the prevention of the expansion of a nuclear disaster.
3) When the Minister of Economy, Trade and Industry recognizes that the Specific Event has exceeded the predetermined level and developed into a nuclear emergency situation, the Minister shall immediately report it to the Prime Minister.
4) The Prime Minister shall declare “Nuclear Emergency Situation” in response to it and direct relevant local governments to take emergency response measures such as sheltering or evacuation and preventive stable iodine administration.
5) The Prime Minister shall establish NERHQs in Tokyo, which he shall head, and the “Nuclear Emergency Response Local Headquarters” hereinafter referred to as “Local NERHQs”, at the concerned Off-Site Center.
6) In a nuclear emergency, the NSC Japan shall convene the “Technical Advisory Organization in an Emergency” that is composed of the Commissioners and the Advisors for Emergency Response and shall give technical advice to the Prime Minister.
7) Local governments shall establish their own emergency response headquarters.
8) In order to share information among the National Government, local governments, and related organizations such as licensees, etc., and, if necessary, to coordinate emergency measures to be implemented by the respective organizations, “the Joint Council for Nuclear Emergency Response” shall be established at the Off-Site Center (Figure II-2-2).

(3) Nuclear emergency response drill

The purpose of a nuclear emergency response drill is 1) to enhance understanding of, and to

facilitate actions for, nuclear emergency response by the relevant personnel of the National Government, local governments, the licensee, and residents, and 2) to verify whether emergency response measures function as planned, and whether information sharing and cooperation among related organizations are sufficient. The National Government, local governments, designated public organizations and the licensee cooperate and participate in drills, which cover communication, monitoring, decision on emergency measures to be taken, sheltering or evacuation, etc.. In Japan, various forms of drills are performed and a large scale national drill is performed once a year.

| Events | Criteria for Specific Event | Criteria for Nuclear Emergency |
|---|---|---|
| a) Radiation dose near the site boundary | 5 micro Sv/h or more at one point for more than consecutive 10 minutes | 500 micro Sv/h or more at one point for more than consecutive 10 minutes |
| | 5 micro Sv/h or more at two or more points simultaneously | 500 micro Sv/h or more at two or more points simultaneously |
| b) Detection of radioactive materials in usual release points such as exhaust pipes | When the concentration of radioactive materials equivalent to 5 micro Sv/h or more continues for 10 minutes or more, or radioactive materials equivalent to 50 micro Sv/h or more are released | When the concentration of radioactive materials equivalent to 500 micro Sv/h or more continues for 10 minutes or more, or radioactive materials equivalent to 5 mSv/h or more are released |
| c) Detection of radiation or radioactive materials by fire, explosion, etc (outside the control zone) | Radiation dose of 50 micro Sv/h or more | Radiation dose of 5 mSv/h or more |
| | Release of radioactive materials equivalent to 5 micro Sv/h or more | Release of radioactive materials equivalent to 500 micro Sv/h or more |
| d) Individual events of each nuclear installation | | |
| Failure of reactor scram | When the nuclear reactor shutdown cannot be performed by usual neutron absorbers | When all reactor shutdown functions are lost in a case where emergency reactor shutdown is necessary |
| Loss of reactor coolant | When leakage of nuclear reactor coolant occurs, which needs operation of the emergency core coolant system (ECCS) | When water cannot be injected into the nuclear reactor by any ECCS |
| Loss of all AC power supplies | When power supply from all AC power supplies is failed for 5 minutes or more | When all functions for cooling a reactor are lost with loss of all AC power supplies |
| Decrease in water level of the spent fuel pool at reprocessing facilities | When water level is decreased to the point where a fuel assembly is exposed | |

| | |
|---|---|
| - The competent minister sends staff with expertise on request of local governments.<br>- The resident Senior Specialist for Nuclear Emergency Preparedness carries out necessary work. | - The competent minister reports the nuclear emergency to the Prime Minister after confirming the situation.<br>- The Prime Minister declares "Nuclear Emergency" and takes the following responses:<br>- to lead, advise or direct related local governments on necessary measures such as sheltering or evacuation;<br>- to establish NERHQs and Local NERHQs; and<br>- to establish the Joint Council for Nuclear Emergency Response for information exchange among the National Government and local governments |
| - Related ministries and agencies organize a joint task group in Tokyo on nuclear accident countermeasures.<br>- Related local organizations organize a joint local task group in the Off- Site Center. | |

Figure II-2-1 Specific Event and Nuclear Emergency Provided for in the Act on Special Measures Concerning Nuclear Emergency Preparedness

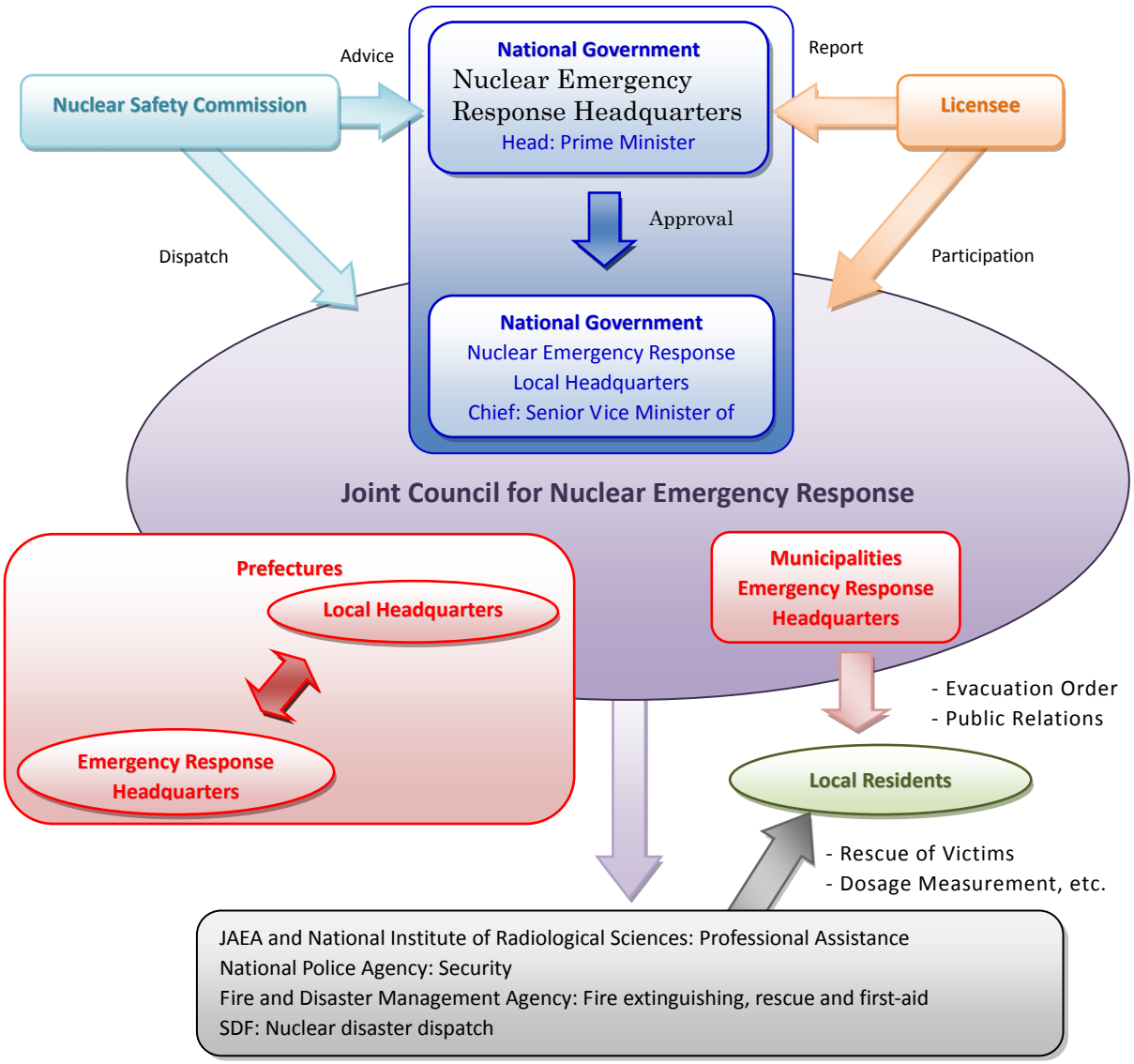


Figure II-2-2 Outline of the organizations relating to nuclear emergency responses

# III Disaster damage by the Tohoku Region - Off the Pacific Ocean Earthquake and Tsunami in Japan

## 1. Damage by the earthquake and tsunami in Japan

### (1) Outline of the Tohoku Region - Off the Pacific Ocean Earthquake

#### 1) Tectonic setting and earthquake summary

The Japanese Islands are situated at the boundaries of four tectonic plates: the North American, Eurasian, Pacific and Philippine Sea plates, as shown in Figure III-1-1. The Japanese Islands receive strong compression from two directions caused by subductions of the Pacific and Philippine Sea plates.

The Tohoku Region – Off the Pacific Ocean Earthquake (hereinafter referred to as this earthquake) occurred on the boundary of the North American plate along the Japan Trench and the Pacific plate as shown in Fig. III-1-1 at 14:46 on March 11, 2011. The Japan Meteorological Agency (JMA) estimated that the hypocenter was approximately 130 km off the coast of Sanriku, the depth was 24 km and the size was Moment Magnitude[1] $M_w$9.0 (The 16$^{th}$ report from JMA). And the Headquarters for Earthquake Research Promotion (hereinafter referred to as HERP) assumes that the source area of this earthquake covered from the offshore area of Iwate Prefecture to that of Ibaraki Prefecture, and its size was above 400km long, and approximately 200km wide. ("Evaluation of Tohoku Region-Off the Pacific Ocean Earthquake" released by the earthquake investigation committee, HERP on April 11). Mechanism solutions showed a reverse fault with a compressional axis in the west-northwest- east-southeast direction.

The hypocenter of this earthquake was off the coast of Miyagi Prefecture as shown in Figure III-1-2 and the rupture was estimated to have propagated simultaneously from the hypocenter in the area off Miyagi Prefecture to the area off Iwate Prefecture in the north and the area off Fukushima Prefecture and Ibaraki Prefecture in the south according to documents released by the HERP and so on. The offshore area of Miyagi Prefecture, as a part of source area of this earthquake, consists of two source areas A and B as shown in

[1] Moment magnitude: A magnitude scale relating the size of an earthquake to the energy released. It can accurately measure the sizes of large earthquakes.

Fig. III-1-2. It is estimated that the rupture started at the hypocenter, which was located in B, propagated westwards to area A, and further spread to the area east to area B. As shown in a cross-section of a-a' in Figure III-1-2, the estimated rupture started at the hypocenter (about 24 km deep), propagated to area A in the deep portion, and further spread to the shallow portion east to area B. It is estimated that the areas with large slip were the area near the southern trench off the Sanriku coast and a part of near-trench areas from the offshore area of North Sanriku to that of Boso, with the maximum slip of above 20 m.

2) Examples of analysis for crustal movement and source process

The Geospatial Information Authority of Japan (Referred to as GSI hereafter) has released a report of crustal movements caused by the earthquake on the basis of GPS observation as shown in Fig.III-1-3. According to this figure, the significant crustal movement occurred in the area from the coast of Miyagi Prefecture to Fukushima Prefecture, and subsidence ranged from 0.5 m to 1.2 m (average subsidence is about 0.8 m). At Ojika observatory in Miyagi Prefecture, the horizontal displacement in a SEE direction was about 5.3 m and the vertical displacement was about 1.2 m.

The JMA analyzed source process[2] for this earthquake and has released slip distribution information as shown in Fig.III-1-4 with the use of observation records from K-NET and KiK-net (operated by the National Research Institute for Earth Science and Disaster Prevention, referred to NIED hereinafter), together with waveform data from JMA accelerometers. By assuming the fault size as 450 km long and 150 km wide, a moment magnitude of 9.0 was obtained and the rupture duration time was 170 sec. In this analysis, slip gradually enlarged near the rupture start point (hypocenter: at 38.10 degrees north latitude, 142.86 degrees east longitude and 23.7 km deep) for about 0 to 60 seconds, and proceeded to the south and to the north separately. The area with large slip was east to northeast side of the rupturing start point (shallower than the hypocenter) and the maximum slip amount was about 30 m. The area with extraordinarily large slip is generally consistent with results from other Japanese or oversea research institutes.

[2] Source process: rupture propagation on the fault plane. Usually inferred from waveform inversion which minimizes the difference between the observed waveforms and theoretical ones synthesized from those of subfaults.

For example, Fujii and Satake carried out tsunami waveform inversion[3] by using tsunami observation records from JMA and other institutions and analyzed the process of tsunami wave source (Refer to Fig.III-1-5). In this, also, the areas with large slip amount distributed in northeast side of the seismic source (black area in the Figure), which agrees with JMA results. Results of slip distribution by the JMA and results of tsunami analysis by Fujii and Satake indicate that the large slip at the shallow plate boundary in the east side of the start point of rupturing is the factor that brought about the large tsunami.

3) Relation with HERP evaluation of long-term seismicity in Japan

The HERP has released evaluation results of earthquake occurrence probability within the next 10, 30 and 50 years, respectively, for earthquakes all over Japan, as shown in Fig.III-1-6 (earthquake occurrence probability within 30 years, based on January 1, 2011). Long-term seismicity evaluation subcommittee, Earthquake Research Committee of HERP has estimated a 99% occurrence probability within 30 years for the Miyagi-ken Oki (literately, off the coast of Miyagi Prefecture) earthquake (seen in Fig. III-1-6) with a magnitude of M7.5 and is alerting the public to this probability. The rupture start point (in the offshore area of Miyagi Prefecture), the assumption of consecutive ruptures of two seismic sources A and B within the same area and the timing of the occurrence were almost the same as evaluated. However, the committee admitted that the size of the source area, which covers the offshore areas of central Sanriku, Miiyagi Prefecture, Fukushima Prefecture, and Ibaraki Prefecture, the consecutive rupturing, and the magnitude M9 were beyond expectation (Earthquake Research Committee, HERP: The evaluation of the Tohoku Region - Off the Pacific Ocean Earthquake released on March 11). Moreover, in contrast to the fact that the rupture spread from the hypocenter to the shallow area of the plate boundary, and slip amount was above 20m, it was assumed that the shallow plate boundary along the Japan trench in the offshore area of Miyagi Prefecture was not able to store a large amount of strain energy, because the area is assumed to be creeping. Some experts, however, commented that the area was strongly coupled, the strain energy has hence been stored for a long time, and the rupturing off the coast of Miyagi Prefecture became the trigger for this earthquake.

(2) Ground motion and tsunami height of the Tohoku Region – Off the Pacific Ocean Earthquake

[3] Tsunami wave inversion: Analysis method to estimate source process by using the time-series data.

1) Ground motion observation

Acceleration waveforms(two horizontal components and one vertical component) recorded at NIED K-NET and KiK-net observation stations in the vicinity of Onagawa NPS, Fukushima Dai-ichi NPS, Fukushima Dai-ni NPS and Tokai Dai-ni NPS are showed in Fig.III-1-7.

Large peaks were produced around 30 seconds and 80 seconds after the earthquake occurred at the observation station (MYG011: distance from the epicenter 127 km) around Onagawa NPS near the epicenter. Although a similar peak is observed in the acceleration records at the observation station (FKS011: epicenter distance 176 km) near Fukushima Dai-ichi NPS, the second peak was larger than the first. These two peaks are assumed to be caused by rupturing in source area B and source area A.

Incidentally, only one peak was observed 120 seconds after in the acceleration waveform at the observation station near the Tokai Dai-ni Power Station (IBR007: epicenter distance 274 km). As for the reason for this, it is assumed that ground motion due to rupturing at seismic sources B and A within the offshore area of Miyagi Prefecture decayed and the effect of the earthquake movement grew larger near Tokai Dai-ni NPS. Factors effecting significantly on ground motion at a NPS site might include the rupture area close to the site, the rupture characteristics, and the consecutive rupturing pattern. Meanwhile, factors effecting significantly on tsunami water level might include the magnitude, the range of the source area, and the consecutive rupture pattern. We hope the difference among those factors will be clarified hereafter in research institutes at home and abroad.

The seismic intensity distribution in East Japan is shown in Fig.III-1-8. The maximum intensity in Kurihara City in Miyagi Prefecture was 7. The area that was hit by a JMA intensity 5 or stronger covered a large area including both the Tohoku and Kanto regions. The intensity at the area near Onagawa NPS, Fukushima Di-ichi NPS, Fukushima Dai-ni NPS and Tokai Dai-ni NPS were 5 strong to 6 strong.

2) Tsunami observation

The observed tsunami waveform by the GPS wave meter at Kamaishi City in Iwate Prefecture as measured by the Port and Airport Research Institute is shown in Fig. III-1-9.

The observed maximum level of the tsunami was 6.7 m for the first wave that hit approximately 26 minutes after the earthquake struck at 14:46. The cycle of the tsunami was irregular and uncertain for the first to third waves, but the interval between the fourth to seventh waves was approximately 50 minutes. As for its features, the first wave had two steps and was 2 m at 6 minutes after the event and this increased to 6.7 m during the next 4 minutes.

The observed tsunami water level as measured by the JMA in the coastal area of East Japan is shown in Fig. III-1-10. The observed tsunami water level was 8.5 m or more in Miyako point, 8.6 m or more in Ayukawa point in Ishinomaki City and 9.3 m or more in Soma point. Tsunamis were also observed hitting the Pacific coast in Canada, the U.S. and Latin America etc., and a maximum height of 2 m was observed in Chile.

According to Satake, the wave height of a tsunami is assumed to be made by the superposition of the long–period wave accompanied by the slip in rather deep areas, such as with the Jogan Earthquake (in 869) and short- period high waves by the slip in shallow areas such as the Meiji Sanriku-oki Earthquake (in 1896) (Please refer to Fig.III-1-11). Therefore, it is assumed that long- period tsunami surged repeatedly after the high wave and then short- period tsunami reached and then ran up to the coastal area, which was assumed to enlarge the run-up area. The run-up height was 38.9 m in Aneyoshi, Miyako City, Iwate Prefecture, according to an investigation by the Japan Society of Civil Engineers. The run-up height in the Sanriku area exceeded that of the Meiji Sanrikuoki Earthquake (1896) and the Showa Sanrikuoki Earthquake (1933) (Please refer to Fig. III-1-12).

3) Occurrence of aftershocks and induced earthquakes

Cumulated numbers of aftershocks of M5 or greater, M6 or greater, and M7 or greater were 444, 76 and 5, respectively, as of May 6. The most powerful aftershock occurred at 15:15 on March 11, and the magnitude of the earthquake was M7.7. As for the other main aftershock, this occurred at 15:25 on the same day far from the coast of Miyagi Prefecture (the depth was approximately 34 km and M7.5), and the earthquake at 23:32 on April 7 off the coast of Miyagi Prefecture (depth was approximately 40 km and M7.0).The aftershock on April 7 occurred at approximately 40 km east from Ojika Peninsula, and large ground motion was observed in Onagawa NPS.

The occurrence of the triggered earthquakes is shown in Fig.III-1-13. Triggered earthquakes

occurred all over Japan including Nagano Prefecture, Akita Prefecture, and Fujinomiya in Shizuoka Prefecture. As for earthquakes near NPPs, a M6.7 earthquake occurred near the Tokamachi fault belt in the northern area of Nagano Prefecture approximately 50km southeast from Kashiwazaki NPS on March 12. And a M7.1 earthquake occurred near the Idozawa fault belt approximately 50 km southwest of Fukushima Dai-ichi NPS on April 11. This earthquake was a normal fault-type earthquake with a tension axis that ran along a west-southwest to east-northeast direction, and which occurred at the shallow depth within the plate. The Tohoku Region is a region with a distinctive distribution of active faults in reverse faults, and this is the first time a normal-fault-type inland earthquake was found.

Along with this, on April 28, the Nuclear Safety Commission (the NSC Japan) stated the following opinions written below and issued an investigation requirement to NISA, which has been reviewing the seismic safety evaluation for existing nuclear reactor facilities etc. (hereinafter referred to as “seismic back-checks”) by reflecting the “Regulatory Guide for Reviewing Seismic Design of Nuclear Power Reactor Facilities“(decided by the NSC on September 19, 2006, hereinafter referred to as “new seismic guidelines”). NISA issued a similar direction to the utilities on April 28.

- If the earthquake occurrence was identified in the areas where earthquake activity was not active, or if the earthquake occurred near faults which were not the active faults that require seismic design consideration, the object earthquake has to be evaluated.

- If there is a fault with the possibility to affect the sites after implementing investigations mentioned above, it is necessary to evaluate the ground motion.

(3) Major damage status caused by the Tohoku Region-Off the Pacific Ocean Earthquake

1) Emergency earthquake information (alert) by JMA and related measures taken by local governments

a. Announcement of emergency earthquake information (alert) and details of tsunami information

When a tsunami disaster is anticipated, the JMA announces a “tsunami alert” or “tsunami advisory” approximately three minutes (targeted) after the earthquake occurs. The announcement procedure for providing information for earthquakes and tsunamis is

shown in Fig.III-1-14, and details of the tsunami alert and tsunami advisory are shown in Table III-1-1.

b. The time and details of announcement of tsunami alert by JMA and comparison with those confirmed

The estimated arrival time, height, and confirmed results are compared in Table III-1-2 as for each announcement for a tsunami alert by the JMA for the Pacific coast of East Japan. JMA announced tsunami alerts or tsunami announcements three times at 14:49 (3 minutes after the earthquake struck), at 15:14 (28 minutes after the earthquake), and at 15:30 (44 minutes after the earthquake) after the earthquake at 14:46. The main contents are shown below.

- In the first announcement (14:49, 3 minutes after the earthquake), the JMA announced tsunamis of 6m and 3m would hit Miyagi and Fukushima Prefectures, respectively.

- In the second announcement (15:14, 28 minutes after the earthquake), the tsunami's arrival had already been identified. At this point, the estimated tsunami height was corrected to 6 m, 10 m or more, and to 6m in Iwate Prefecture, Miyagi Prefecture, and in Fukushima Prefecture, respectively. However, a tsunami measuring 8m maximum arrived at Miyako, Kamaishi and Ofunato cities in Iwate Prefecture between 4 to 7 minutes after the announcement. Also in Ayukawa in Miyagi Prefecture, 8.6 m or more wave arrived 12 minutes after.

- In the third announcement(15:30, 44 minutes after the earthquake), arrival was confirmed in Aomori, Iwate, Miyagi, Fukushima and Chiba prefectures, and the arrival of a tsunami was also predicted for Ibaraki Prefecture. In these cases the estimated tsunami height was corrected to 10 m or more in all prefectures except for Aomori Prefecture. The highest waves had already arrived in Miyako City in Iwate Prefecture, Ofunato City, and Ayukawa in Miyagi Prefecture.

The estimated tsunami height in the third announcement (15:31, 45 minutes after the earthquake) by the JMA was 8 m and 10 m or more, but the highest waves had already arrived approximately 10 to 12 minutes before the announcement.

c. Evacuation status in the local governments who received Tsunami alert from JMA

A “tsunami alert (large tsunami)” announced by the JMA initially estimated the height as 3 m or so for Iwate and Fukushima Prefectures (Initially, a 6 m height tsunami was predicted for Miyagi Prefecture). However, this was corrected to 6 m 30 minutes later, and corrected again to 10 m or higher 15 minutes later still. The evacuation status in each local government responding to these tsunami alerts is shown in Table III-1-3 by taking examples of the responses from Yamada Town, Kamaishi City, Ofunato City and Rikuzen Takada City in Iwate Prefecture, and Mminamisanriku Town, and Kesennuma City in Miyagi Prefecture based on the homepage of the Asahi Shimbun.

The details of the announcements over the community wireless systems in cities, towns and villages were different from government to government. Some cities, towns and villages were not able to receive the follow-up reports due to electric outages, and continued to announce waves of heights of “3 meters or so” in line with the initial report. Therefore some local communities suffered extensive extra causalities because the communities considered it sufficiently safe to shelter only the second floors of buildings, for example rather than evacuating to higher ground. The announced height of three m may well have played a role in preventing appropriate evacuation in some cases. Announcements ordering people to evacuate instead of just announcing the estimated tsunami height were extremely effective for some local governments.

d Improvement measures for tsunami alerts by JMA

The JMA did the best to announce information for this earthquake and tsunami in light of current technologies. However, we realized that a complete back-check and extensive preparations for future situations is essential to provide best-case information that enables a safe and effective response to future M9-class mega earthquakes. Therefore the JMA announced on May 19, 2011 to fortify its network of earthquake and tsunami observation networks and to progress with the improvement of tsunami information steadily by learning lessons from the experience of this earthquake and tsunami.

Specific details are as follows. (1) Verification of details and timing of issued tsunami alerts, (2) Verification of technical issues points (the initially announced magnitude was M7.9; the magnitude was re-evaluated, and was revised higher as time went by. Therefore it is essential to develop technology to estimate the correct magnitude as quickly as possible). (3) To identify remained issues.

The JMA conducted study sessions whose members were experts in universities, research institutes, etc., and related organizations, etc. for disaster preparedness, toward the improvement of tsunami alerts, and announced that the first session would be held on June 8. The JMA also announced that it would summarize their direction of its tsunami alert improvement after gathering and sorting out opinions from experts, by around the autumn of this year.

Adding to that, the JMA mentioned that it would provide more information, and more precise information in its announcements to make it easier for the public to use. In this, the JMA is moving forward not only by itself, but in collaboration with various organizations including related administrative agencies and local governments. The JMA also mentioned that it would try to make the public better informed and conduct educational outreach.

2) Overall damage situation

In terms of the area inundated by the tsunami, according to the GSI, Miyagi Prefecture had an area of 327 $km^2$ inundated, Fukushima Prefecture an area of 112 $km^2$ and Iwate Prefecture had an area 58 $km^2$ inundated. The total inundated area was up to 561 $km^2$ (GSI No.5 Report on approximate inundated area). The total number of residential buildings damaged was approximately 475,000 including fully-destroyed, half-destroyed, partially-destroyed and inundated structures. The number of cases of damage to public buildings and cultural and educational facilities was as many as 18,000.

In terms of the extent of damage to infrastructural lifelines, there were approximate 4,000 spots of road damage identified and approximately 7,280 spots of damage to railways (including approximately 1,680 spots caused by the tsunamis). In addition, approximately 460,000 households suffered from gas supply stoppages, approximately 4,000,000 households were cut off from electricity, and 800,000 phone lines were knocked out. (Sources: Emergency Disaster Response Headquarters as of 16:00 on May 30; East Japan Railway Company as of April 17; Japan Gas Association, as of March 12; Ministry of Economy, Trade and Industry as of April 12; Emergency Disaster Response Headquarters, peak damage estimate calculated from 12:00 on March 12).

There were over 120 sites of damage from landslides including mudslides, slope failures,

and ground deformation (NIED release as of May 19). Dams burst, and several people went missing in Fukushima Prefecture. Large-scale ground liquefaction occurred in the coastal areas such as Urayasu City, Makuhari City etc. and on the Kujukuri plain etc. (Environment Research Center in Chiba Prefecture (Second Report) posted on April 15).

24,769 people have been reported as dead or missing (Emergency Disaster Response Headquarters, as of 17:00 on May 30.)

3) Damage to seawalls and the like around harbor installations

Based on the research results of damage to seawalls and ancillary facilties, the effect of scouring[4] and wave power is shown as follows.

The ground around the bases of tidal embankments and seawalls were scoured by runups and rundowns and many of the bases were observed to have suffered collapses as shown in Fig. III-1-15. And the lining of embankments and seawalls (concrete portions that cover rocks and ground inside embankments) suffered boring from the lower edge of bases, and did not play a sufficient role in lessening the impact of the tsunami. Given this situation, there is the possibility that sand embankments would collapse through by scouring due to runups and rundowns and breakwater walls would be scoured or collapse if tsunamis breach the sand embankments when these are used as coastal defenses. Therefore technical guidelines should be prepared and organized for several kinds of countermeasures.

Ancillary facilities for embankments were run down by strong wave pressure of tsunami as shown in Fig. III-1-15. As for treatment of wave pressure, it is pointed out that improvement of the wave pressure calculation formula in tsunami assessment methods (2002) by the Tsunami Evaluation Subcommittee in the Japan Society of Civil Engineers is necessary, especially for treatment of wave pressure distribution characteristics etc. of soliton breakup waves. Therefore the calculation formula in the tsunami assessment method (2007) in this committee was improved by using the data obtained from water tank testing. Further upgrading of assessment technologies is important along with the application of this formula to damage by this tsunami and for verification.

The tidal embankment in the Taro area of Miyako City in Iwate Prefecture is referred to

[4] Scouring: Phenomenon in which seashores and earth and sand at the sea bottom are shove off mechanically by Tsunami. Grounds around the bases of embankments were rushed away due to runups and rundowns in this tsunami, and bases lost their bearing capacity, and embankments collapsed.

locally as the “Great Wall of China” as it towers 10 meters high. However, even this collapsed when hit by a tsunami that was 15m high, or possibly higher, and significant damage occurred within the embankment as shown in Fig. III-1-16 (left photo) (Asahi Shimbun posted on March 20). Incidentally, the 15.5 m embankment as shown in Fig. in III-1-16 (right photo) was installed in the Ootabu area, Fudai village in Iwate Prefecture following a strong desire of the village chief learning from previous experiences with tsunami. This embankment was able to resist the 15m tsunami and prevented the damage within the embankment zone (Yomiuri Shimbun, posted on April 3). These areas are coastlines that have, historically, suffered significantly from giant tsunamis in the 15m range such as the Meiji Sanriku Tsunami (1896) and the Showa Sanriku Tsunami (1933). Following these experiences the town had decided to prepare itself against 15m-class tsunami. (Yomiuri Shimbun, posted on March 30). Against these tsunamis, there was a sharp contrast between the Ootabe area, which heeded the lessons of the past, and the Taro area, which didn’t.

In the Aneyoshi area, Miyako City in Iwate Prefecture, there is a stone monument with the warning not to build houses in the area lower than that point as shown in Fig. III-1-17 (left picture) at the entrance (height 60 m) of the village, showing lessons learned from runups of the two historical tsunamis mentioned above.

By observing this lesson, the area was able to avoid casualties this time even though the tsunami ran up (the actual runup height was 38.9 m) near the village as shown in the figure (right picture).

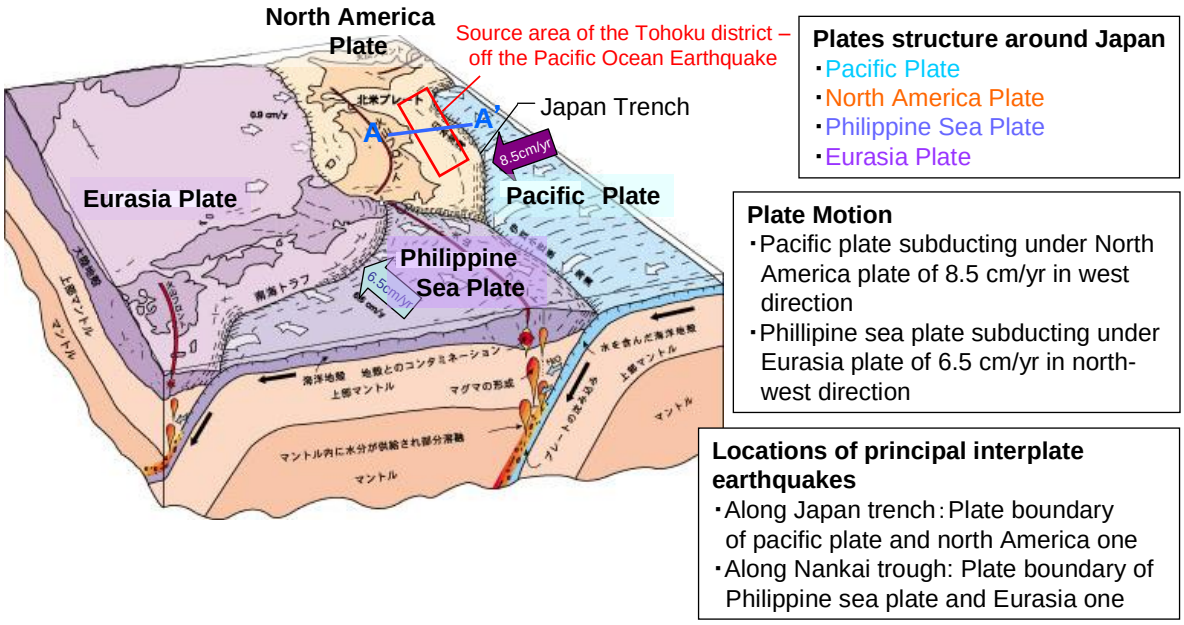


Reference: JGCA HP [Online]. http://www.zenchiren.or.jp/tikei/index.htm
Partially modified by JNES.

Fig. III-1-1 Plate tectonics around Japan.

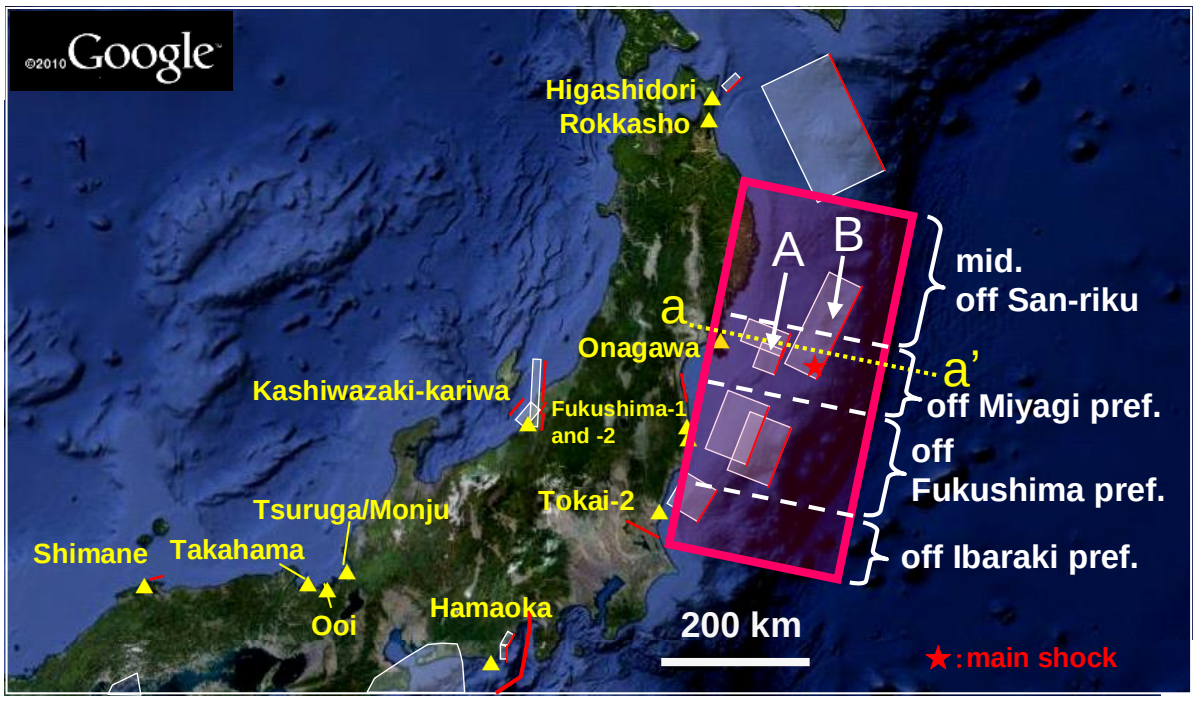


JNES modified a part of the Google map.

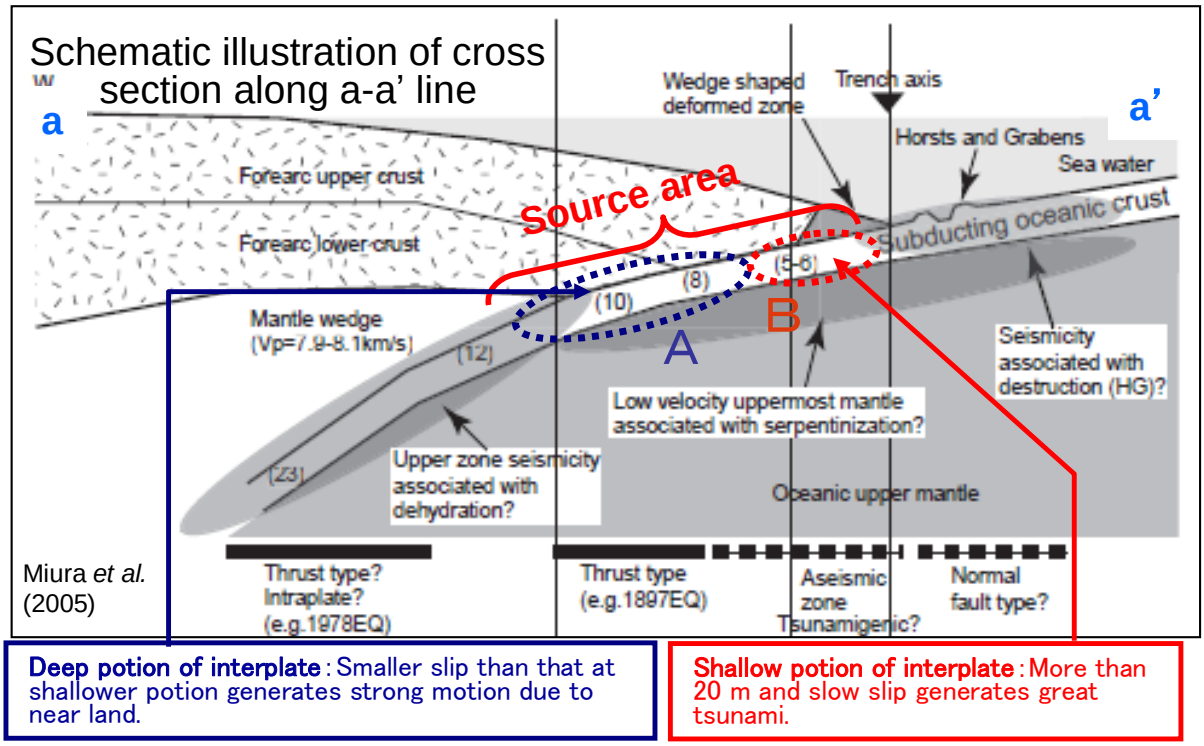


Reference: Miura et al. (2005: Tectonophysics, Vol.407)
Partially modified by JNES.

Fig. III-1-2 The source area of the earthquake on Mar. 11 consisting of multi-segment rupture.

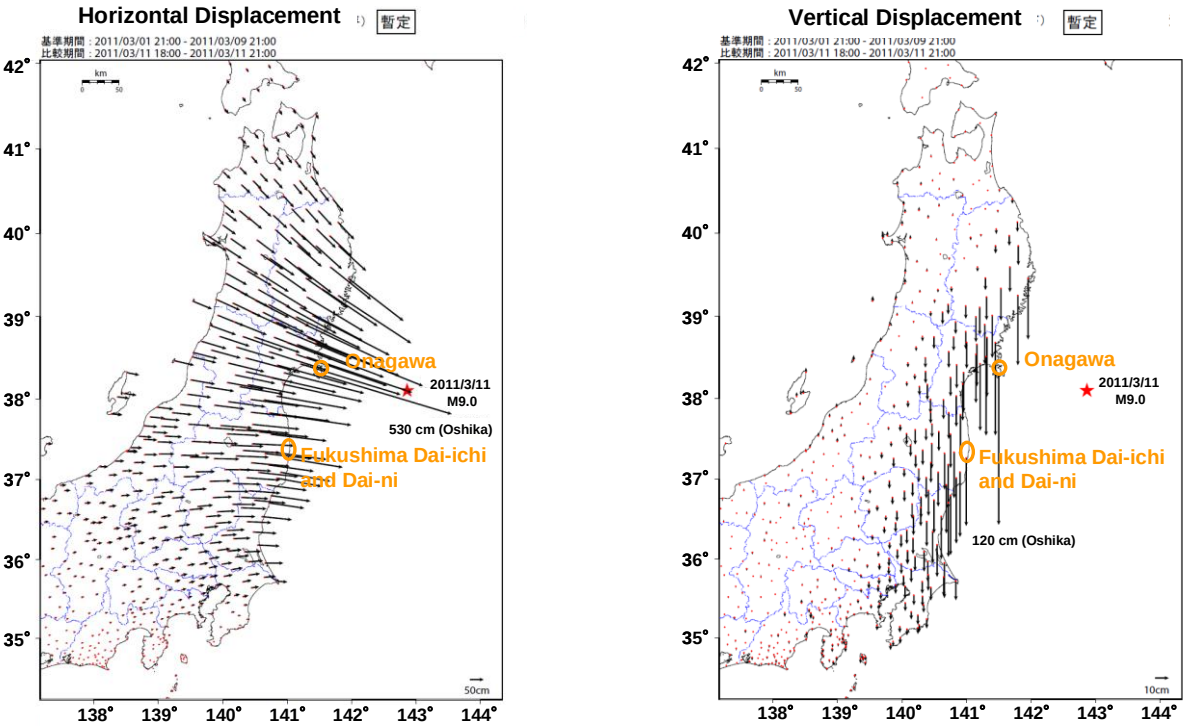


Reference: GSI Release (GSI preliminary values at 11. Mar. 2011)
[Online]. http://www.gsi.go.jp/
Partially modified by JNES.

Fig. III-1-3 Coseismic crustal deformation associated with the main shock. Horizontal deformation (Left) and vertical deformation (Right).

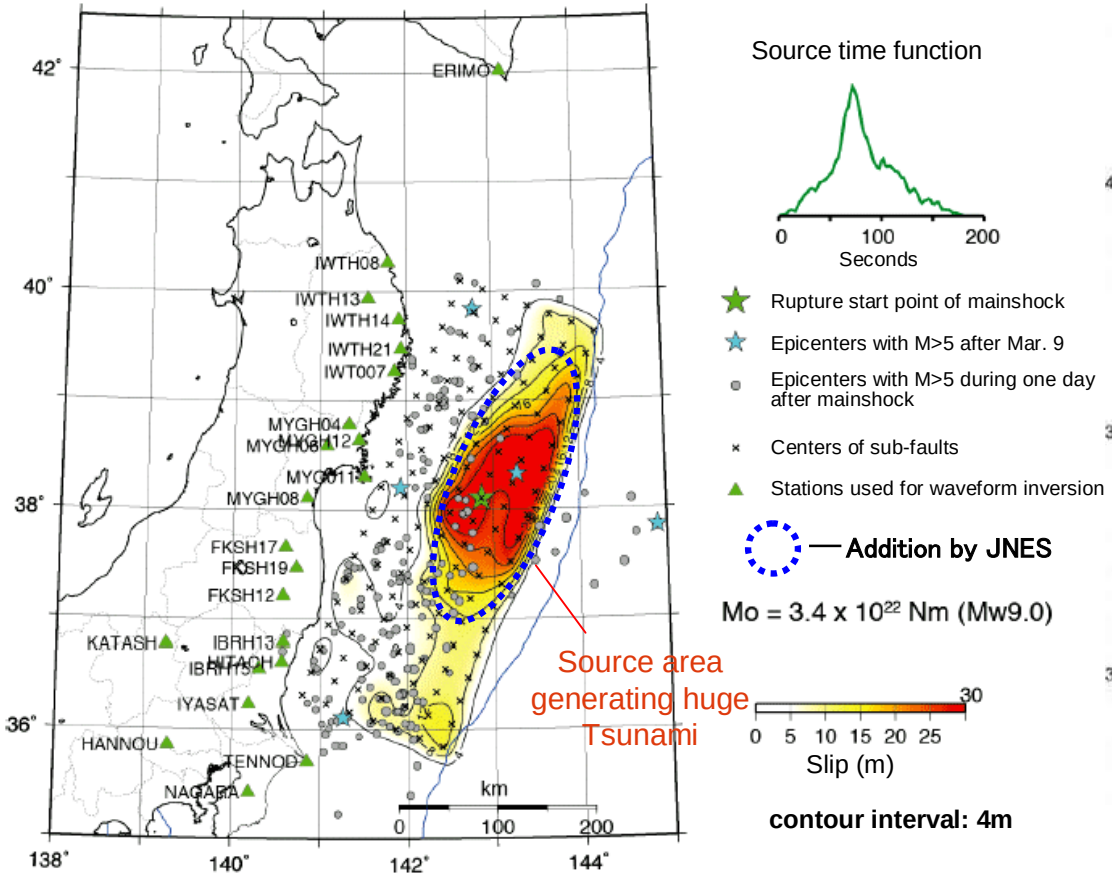


Reference: JMA Release
[Online]. http://www.mri-jma.go.jp/Dep/sv/2011tohokutaiheiyo/source-process2.pdf
Partially modified by JNES.

Fig. III-1-4 Source model based on seismic waveform inversion (JMA).

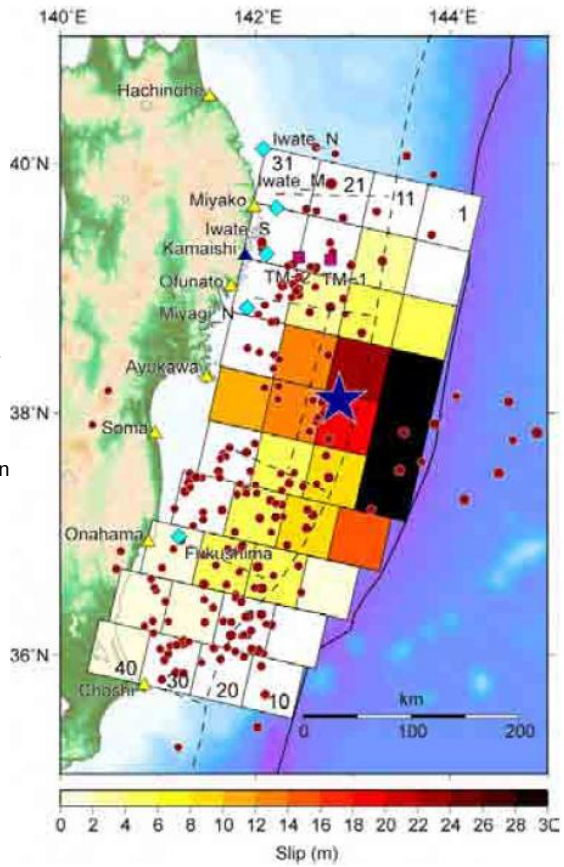


Reference: Fujii and Satake (Tsunami source model (Ver. 4.0) [Online]. http://iisee.kenken.go.jp/staff/fujii/OffTohokuPacific2011/tsunami_ja.html
Partially modified by JNES.

Fig. III-1-5 Source model from tsunami inversion.

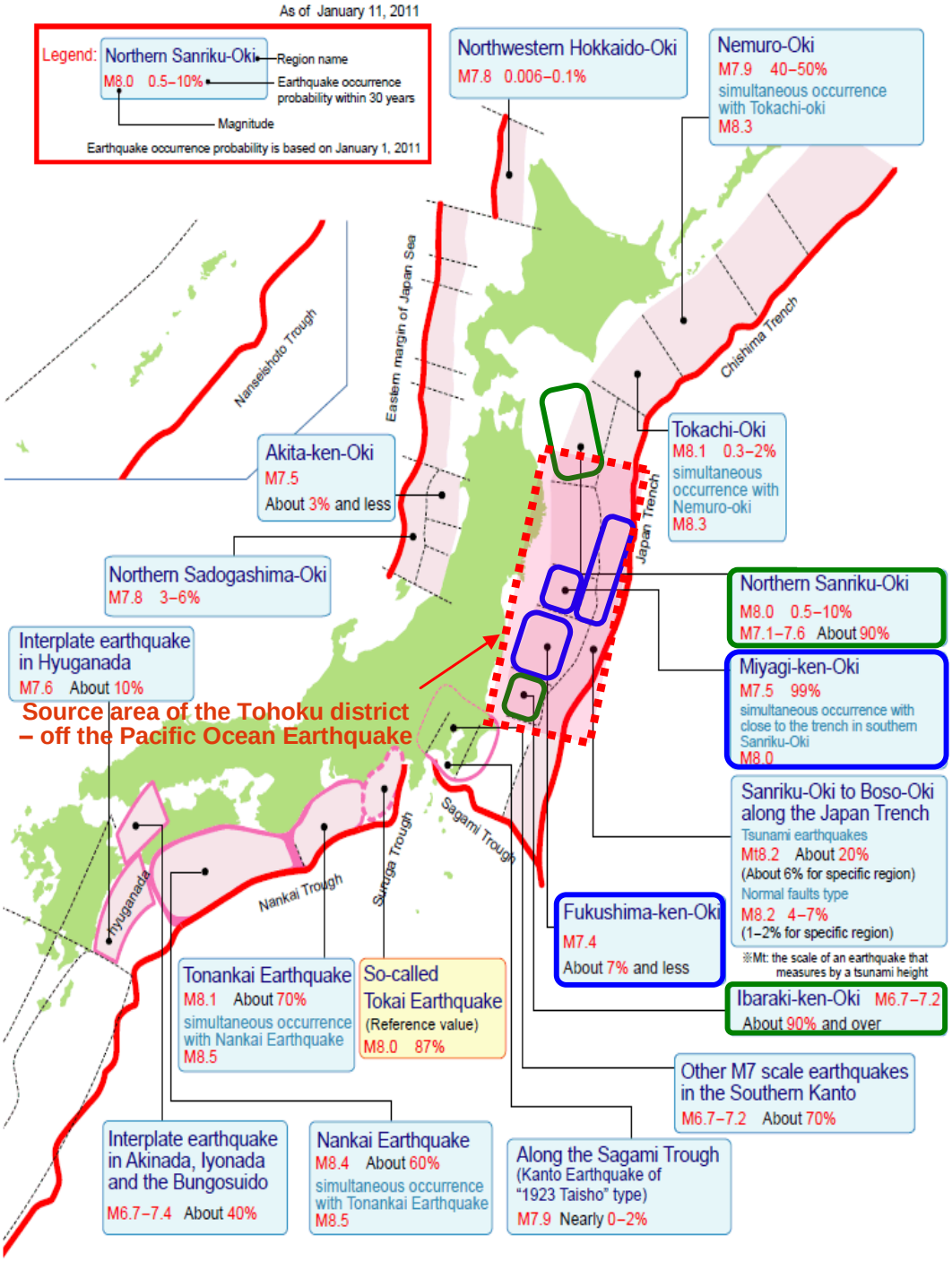


Reference: Earthquake Research Comit., HERP Release [Online]. http://www.jishin.go.jp/main/index-e.html
Partially modified by JNES.

Fig. III-1-6 Comparison of the source areas of the main shock and scenario earthquakes evaluated by Long-Term Evaluation Subcommittee, Earthquake Research Committee, Headquarters for Earthquake Research Promotion (HERP).

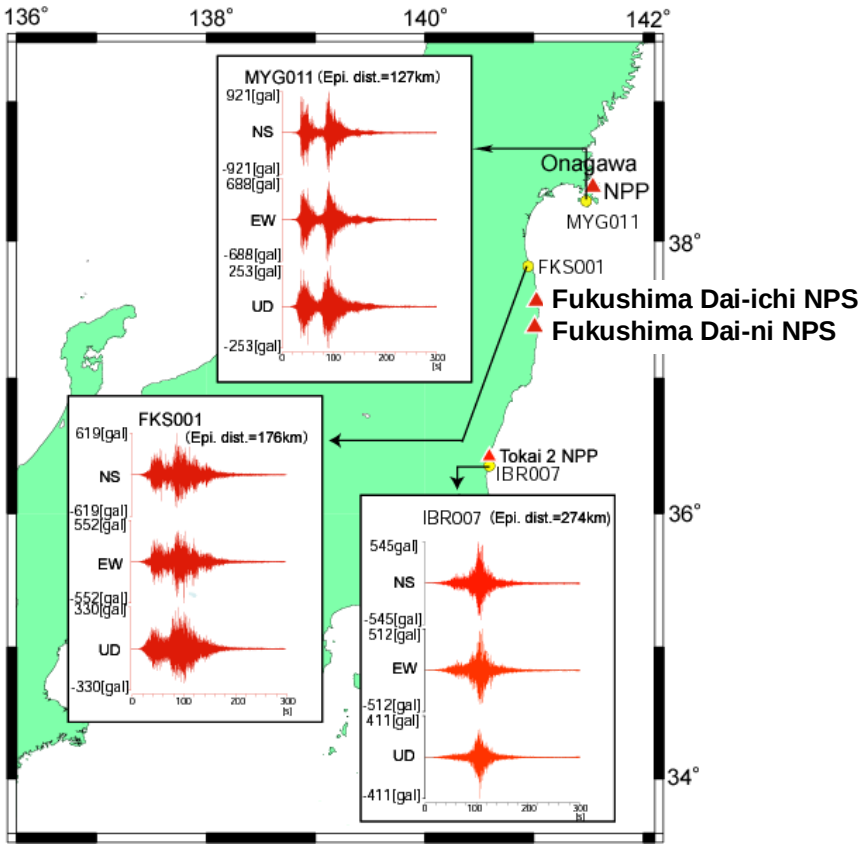


Fig. III-1-7 Acceleration seismograms recorded at around NPSs.

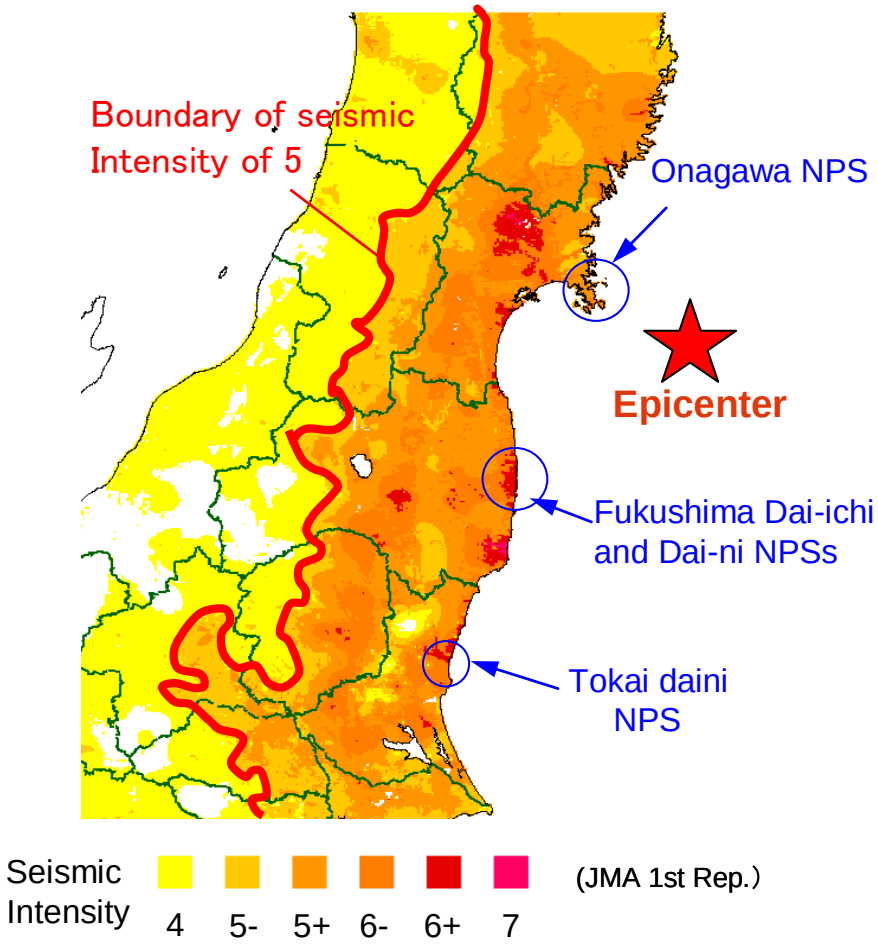


Reference: JMA Release [Online]. http://www.jma.go.jp/jma/index.html
Partially modified by JNES.

Fig. III-1-8 Map of JMA seismic intensities observed during the main shock.

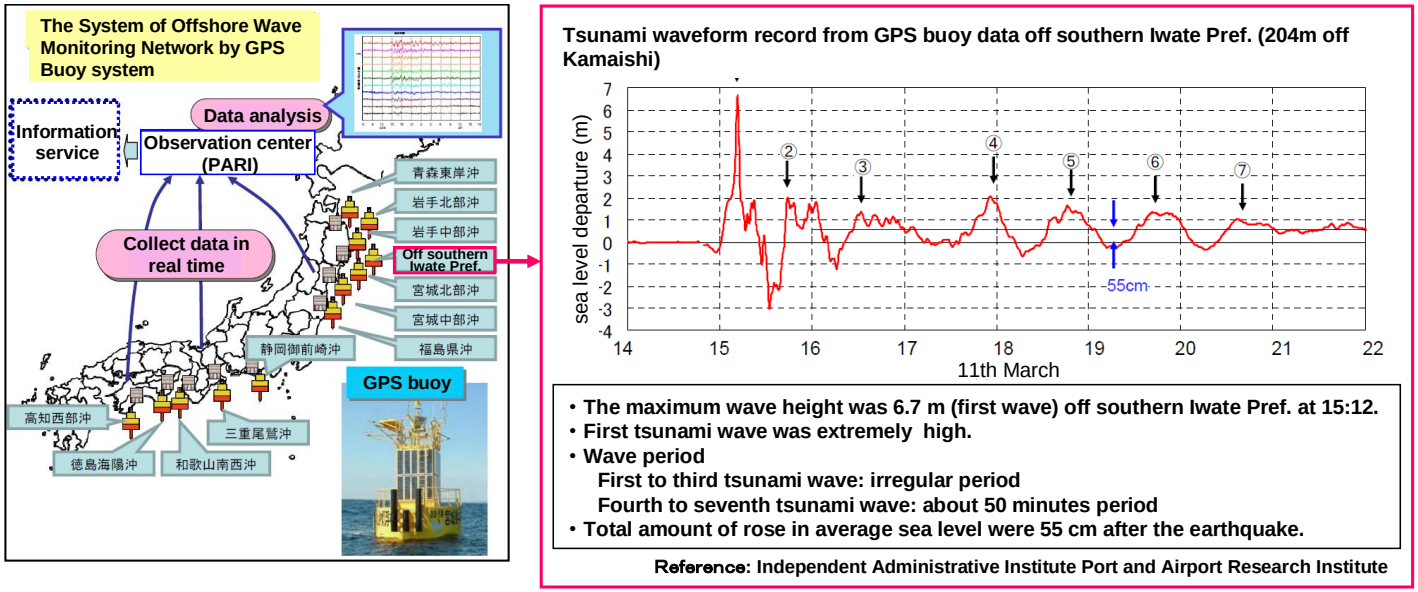


Fig. III-1- 9 A tsunami wave observed at off southern Iwate Pref..

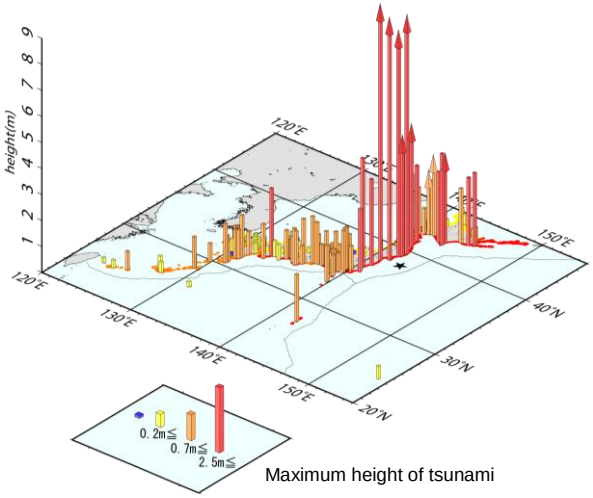


**Observed Tsunami (time and height)**

| Station name | First tsunami | Maximum height of tsunami |
|---|---|---|
| Soma (Fukushima)* | March 11, 14:55 JST +0.3m | March 11, 15:51 JST +9.3m<= |
| Miyako (Iwate)* | March 11, 14:48 JST +0.2m | March 11, 15:26 JST +8.5m<= |
| Ofunato (Iwate)* | March 11, 14:46 JST -0.2m | March 11, 15:18 JST +8.0m<= |
| Ishinomaki (Miyagi)* | March 11, 14:46 JST +0.1m | March 11, 15:26 JST +8.6m<= |
| Oarai (Ibaraki) | March 11, 15:15 JST +1.8m | March 11, 16:52 JST +4.2m |
| Kamaishi (Iwate)* | March 11, 14:45 JST -0.1m | March 11, 15:21 JST +4.1m<= |
| Mutsu (Aomori) | March 11, 15:20 JST -0.1m | March 11, 18:16 JST +2.9m |
| Nemuro (Hokkaido) | March 11, 15:34 JST slight | March 11, 15:57 JST +2.8m |
| Tokachi (Hokkaido)* | March 11, 15:26 JST -0.2m | March 11, 15:57 JST +2.8m<= |
| Urakawa (Hokkaido) | March 11, 15:19 JST -0.2m | March 11, 16:42 JST +2.7m |

*Maximum height of tsunami cannot be retrieved so far to the troubles.
Actual maximum height might be higher.

Fig. III-1-10 Map showing observed tsunami height (quoted from the paper preparing for the 1st meeting "Learn from Tohoku district – off the Pacific Ocean Earthquake" of expert examination committee, Central Disaster Prevention Council).

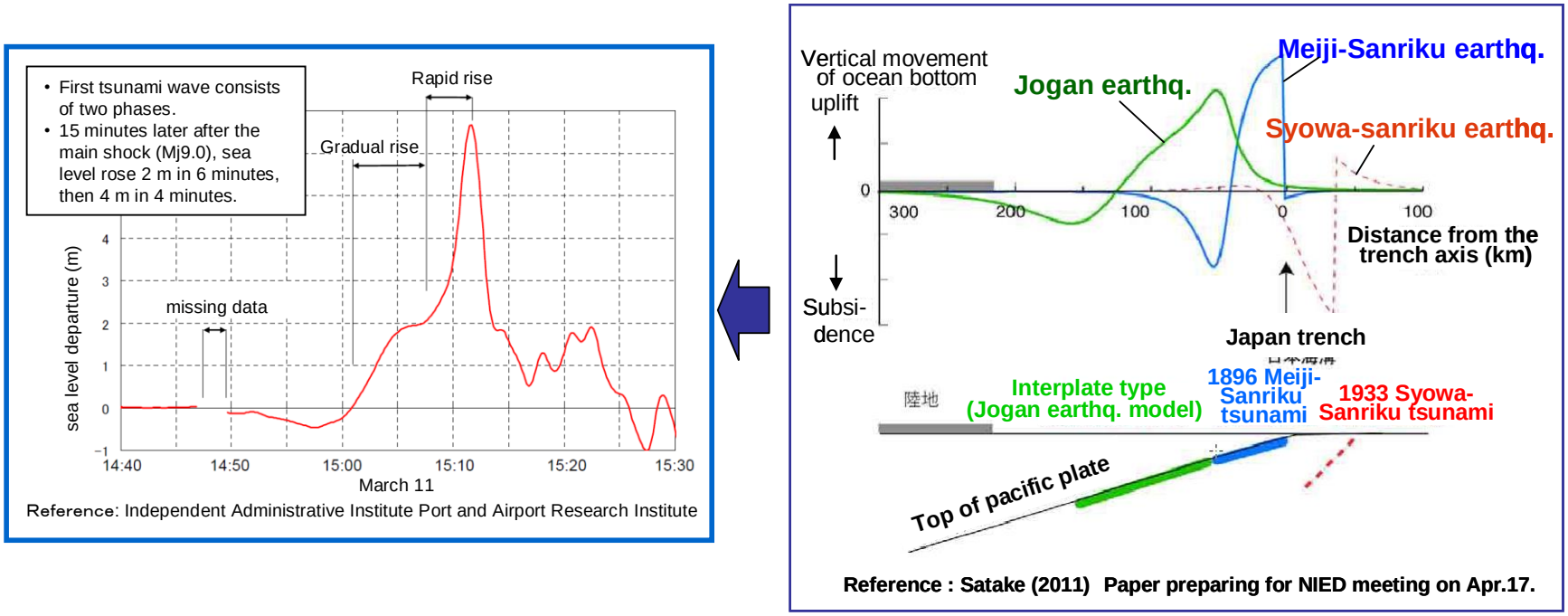


Fig. III-1-11 Characteristics of tsunami wave observed at off southern Iwate pref. for the main shock.

## Comparison the height of 3.11/2011 Tsunami with historical San-riku Tsunami

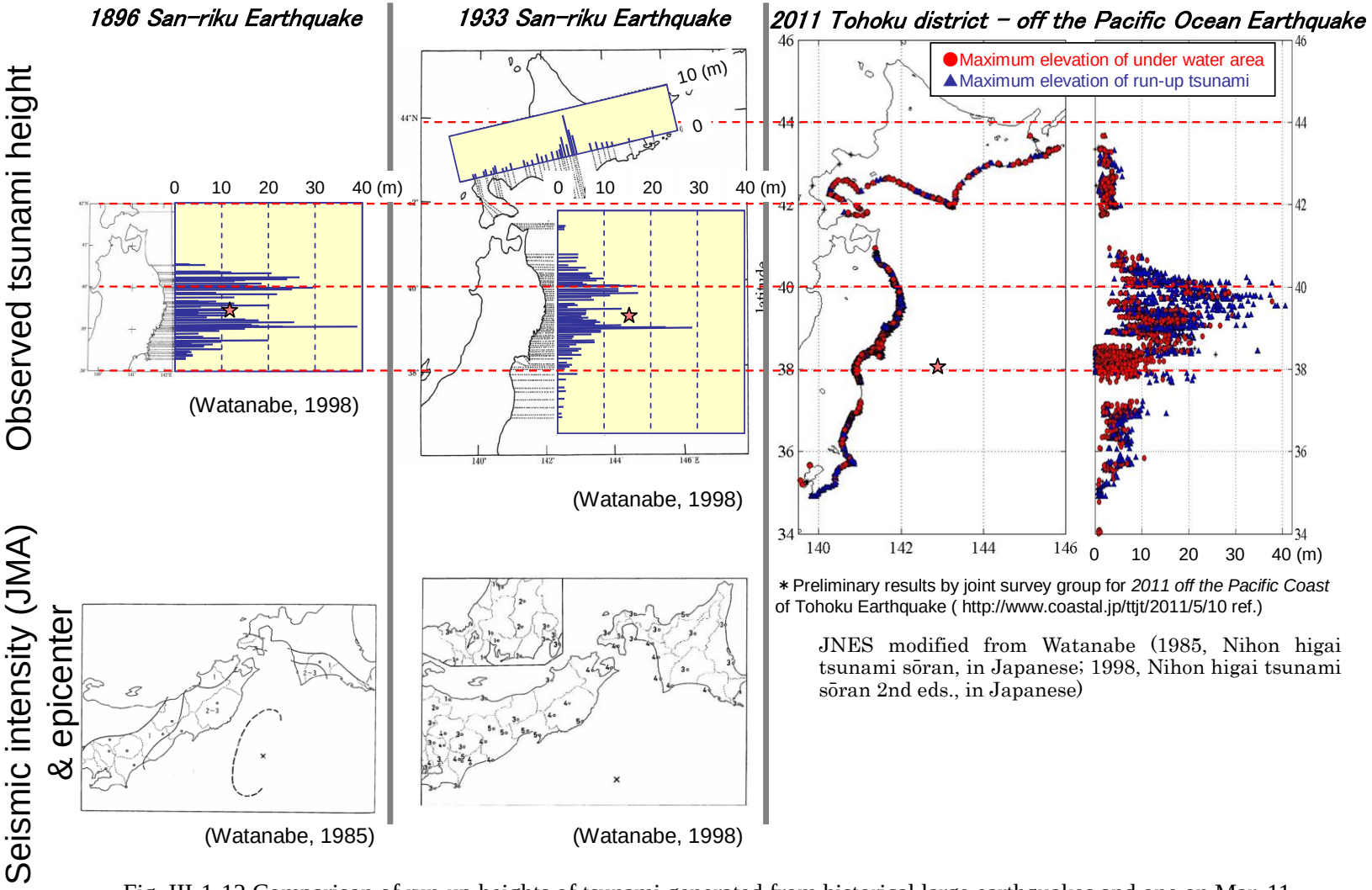


∗ Preliminary results by joint survey group for *2011 off the Pacific Coast* of Tohoku Earthquake ( http://www.coastal.jp/ttjt/2011/5/10 ref.)

JNES modified from Watanabe (1985, Nihon higai tsunami sōran, in Japanese; 1998, Nihon higai tsunami sōran 2nd eds., in Japanese)

Fig. III-1-12 Comparison of run-up heights of tsunami generated from historical large earthquakes and one on Mar. 11.

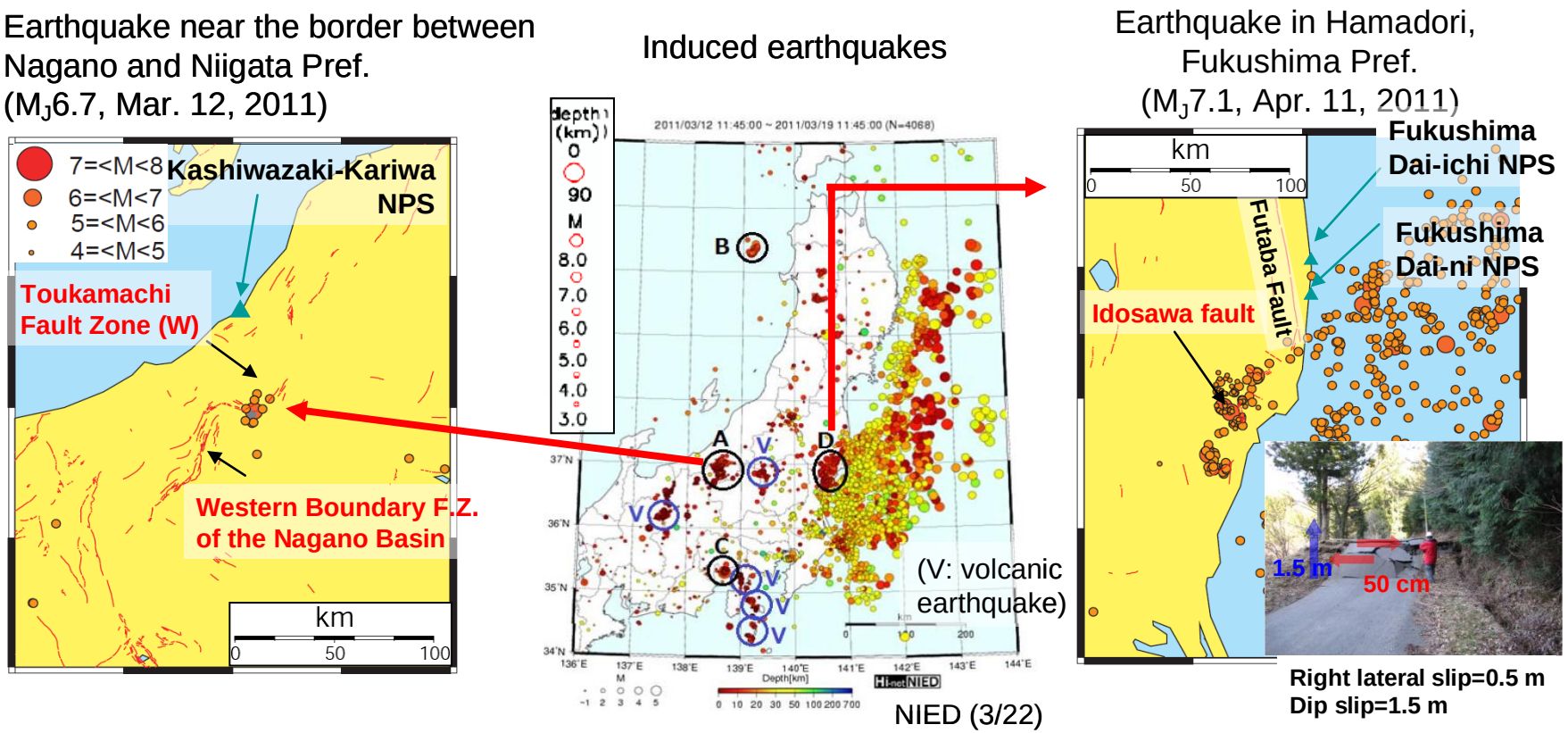


Basemap from NIED
[Online]. http://www.bosai.go.jp/news/oshirase/20110323_01.pdf

Fig. III-1-13 Induced earthquakes by the mainshock.

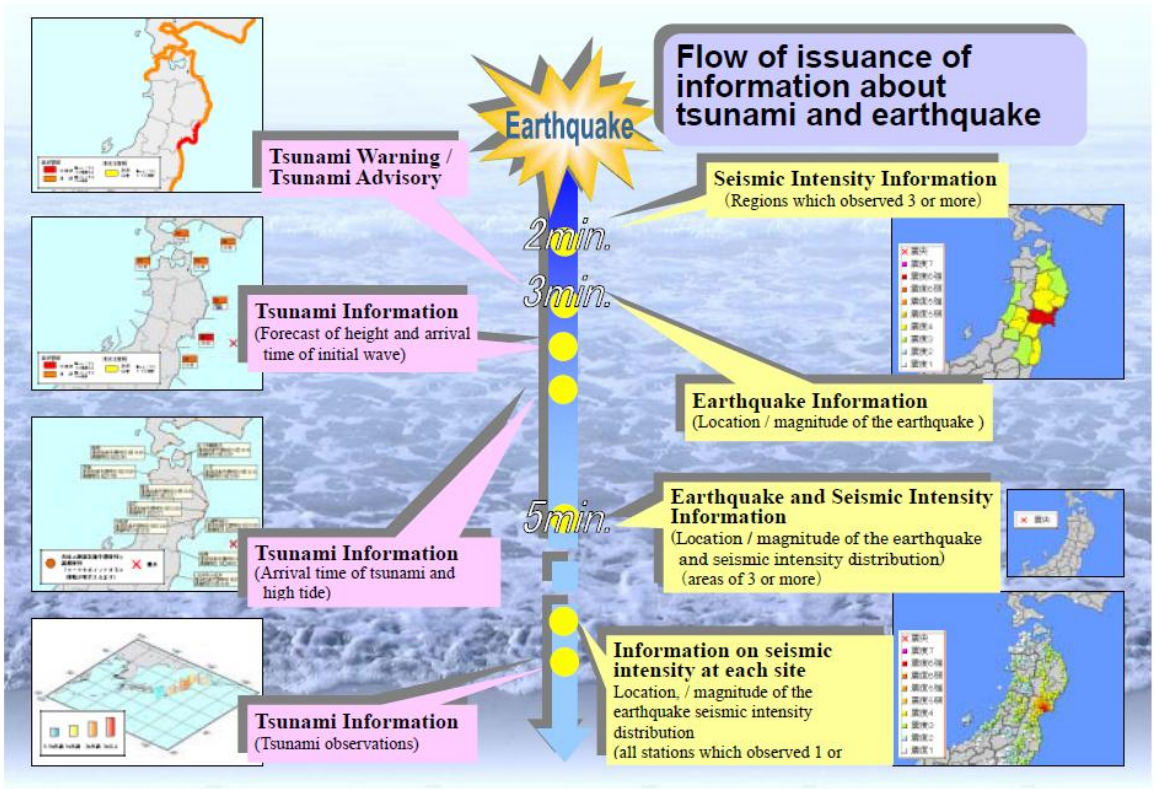


Reference: JMA Release [Online]. http://www.seisvol.kishou.go.jp/eq/eng/fig/info.html

Fig. III-1-14 Flow of issuance of information about tsunami and earthquake by JMA.

Table III-1-1 Explanation of tsunami information and tsunami warning/advisory issued by JMA.

## Tsunami Warning / Advisory

| Category | | Indication | Forecast tsunami height |
|---|---|---|---|
| **Tsunami Warning** | Major tsunami | Tsunami height is expected to be 3 meters or more. | Forecast heights are specifically indicated for every region; namely 3m, 4m, 6m, 8m and 10m or more. |
| | Tsunami | Tsunami height is expected to be up to 2 meters. | Same as above, but 1m or 2m. |
| **Tsunami Advisory** | | Tsunami height is expected to be about 0.5 meters. | 0.5m |

## Tsunami Warning / Advisory and Tsunami Information

| Messages about tsunami | Indication |
|---|---|
| **Tsunami Warning / Advisory** | When the earthquake with the possibility that the tsunami is generated occurs,<br>JMA provide the tsunami warning or tsunami advisory according to expected tsunami height.<br>Tsunami warning (Major tsunami, tsunami) or tsunami advisory is provided within about three minutes after the occurrence of earthquake. |
| **Tsunami information** (forecast of height and arrival time of initial wave) | Forecast of height and arrival times of initial wave are provided for each forecast region. |
| **Tsunami Information** (arrival time of tsunami and high tide) | Information on high tide and forecast arrival time of tsunami at several points are provided. |
| **Tsunami Information** (tsunami observations) | Arrival time and observed tsunami height at tsunami observation stations are provided. |

Reference: JMA Release [Online]. http://www.seisvol.kishou.go.jp/eq/eng/fig/tsunamiinfo.html

Table III-1-2 Comparison of issuing times, arrival times and heights for estimated tsunami and observed one.

| Tsunami Forecast Region | Estimated Tsunami Arrival Time and Height | | | | | | Observed Tsunami Arrival Time and Height of Initial and Maximum Tsunami | | | |
|---|---|---|---|---|---|---|---|---|---|---|
| | Issued at 14:49* JST 11 Mar (3 minutes after the earthquake) | | Updated at 15:14 JST 11 Mar (28 minutes after the earthquake) | | Updated at 15:30* JST 11 Mar (44 minutes after the earthquake) | | Initial Tsunami | | Maximum Height Tsunami | |
| | Estimated Tsunami Arrival Time | Estimated Tsunami Height | Estimated Tsunami Arrival Time | Estimated Tsunami Height | Estimated Tsunami Arrival Time | Estimated Tsunami Height | Observed Time | Observed Tsunami Height | Observed Time | Observed Tsunami Height |
| PACIFIC COAST OF AOMORI PREF. | 15 : 30 | 1m | Arrival of tsunami confirmed | 3m | Arrival of tsunami confirmed | 8m | Hachinohe 15 : 22 | ( - ) 0.8m | Hachinohe 16 : 57 | 4.2m or higher |
| IWATE PREF. | Arrival of tsunami inferred | 3m | Arrival of tsunami confirmed | 6m | Arrival of tsunami confirmed | 10m or higher | Kamaishi 14 : 45<br>Miyako 14 : 48<br>Ofunato 14 : 46 | ( - ) 0.1m<br>( + ) 0.2m<br>( - ) 0.2m | Kamaishi 15 : 21<br>Miyako 15 : 26<br>Ofunato 15 : 18 | 4.1m or higher<br>8.5m or higher<br>8.0m or higher |
| MIYAGI PREF. | 15 : 00 | 6m | Arrival of tsunami confirmed | 10m or higher | Arrival of tsunami confirmed | 10m or higher | Ayukawa 14 : 46 | ( + ) 0.1m | Ayukawa 15 : 26 | 8.6m or higher |
| FUKUSHIMA PREF. | 15 : 10 | 3m | Arrival of tsunami confirmed | 6m | Arrival of tsunami confirmed | 10m or higher | Soma 14 : 55 | ( + ) 0.3m | Soma 15 : 51 | 9.3m or higher |
| IBARAKI PREF. | 15 : 30 | 2m | 15 : 30 | 4m | Arrival of tsunami inferred | 10m or higher | Oarai 15 : 15 | ( + ) 1.8m | Oarai 16 : 52 | 4.2m |
| KUJUKURI AND SOTOBO AREA, CHIBA PREF. | 15 : 20 | 2m | 15 : 20 | 3m | Arrival of tsunami confirmed | 10m or higher | Choshi 15 : 13 | ( + ) 0.5m | Choshi 17 : 22 | 2.4m |


Reference: JMA (Tsunami Information: Estimated Tsunami arrival time and Height (Issued at 14:50* JST, 11 March 2011))
[Online]. http://www.jma.go.jp/jp/tsunami/info_04_20110311145026.html
JMA (Tsunami Information: Estimated Tsunami arrival time and Height (Updated at 15:14 JST, 11 March 2011))
[Online]. http://www.jma.go.jp/jp/tsunami/info_04_20110311151439.html
JMA (Tsunami Information: Estimated Tsunami arrival time and Height (Updated at 15:31* JST, 11 March 2011))
[Online]. http://www.jma.go.jp/jp/tsunami/info_04_20110311153109.html
JMA (The 2011 off the Pacific coast of Tohoku Earthquake ~14th report~)
[Online]. http://www.jma.go.jp/jma/press/1103/13a/kaisetsu201103130900.pdf
JMA (Observed values of Tsunami records at Miyako and Ofunato)
[Online]. http://www.jma.go.jp/jma/press/1103/23b/stn03231400.pdf
JMA (Observed values of Tsunami records at Ayukawa, Ishinomaki City)
[Online]. http://www.jma.go.jp/jma/press/1103/29c/201103291900.pdf
JMA (Observed values of Tsunami records at Soma)
[Online]. http://www.jma.go.jp/jma/press/1104/13a/201104131600.pdf
JMA (Observed values of Tsunami records at Hachinohe)
[Online]. http://www.jma.go.jp/jma/press/1105/27b/kaisetsu201105271730.pdf
JMA (Observed values of Tsunami records at Ayukawa, Ishinomaki City (revised))
[Online]. http://http://www.jma.go.jp/jma/press/1106/03b/tsunami_ayukawa2.pdf


*Note) Announced time of tsunami warning presented on this table is slightly different from that on prompt reports on JMA web site.

Table III-1-3 Tsunami information in municipal disaster management radio communication network each local government.

■ Broadcasting from Municipal Disaster Management Radio Communication Network on Iwate Prefecture

| | State of the broadcasting | Article related to Observed Tsunami | Evacuation in Responding to the Broadcast |
|---|---|---|---|
| Yamada Town | They said "more than 3 meters" of tsunami height. After that, they prepared the broadcast after they confirmed through the information of television that the expected tsunami heights reassessed at 6 meters. However they could not make the broadcast due to evacuating themselves to the rooftop because they could see the tsunami from the fire station building. | No description in articles. | Mr. Taro says that "Many people evacuated to the second floor of their house because they imagined tsunami of about 3 meters height. I evacuated in panic when I saw the tsunami getting over the sea wall." |
| Kamaishi City | They said through the loudspeakers at 96 points within the City that "It can be expected tsunami heights of about three meters at the most. We order the inhabitants who staying near coastlines the to immediate evacuation toward high ground level areas or tsunami shelters", based on the expectation issued by the Japan Meteorological Agency (JMA) at 2:50pm.<br>The JMA reassessed the expectation of tsunami heights at 6 meters at 3:14pm, also reassessed it at more than 10 meters at 3:31pm. However the city hall has become to not receive the prefectural office's emails of information issued by the JMA. Meanwhile they repeated the instruction broadcasting 6 times. | Actually, it was assumed that the tsunami of about 9 meters height attacked the Port of Kamaishi. | In the citizens of Kamaishi City, there were many people who imagined "the tsunami of 3 meters high" and decided the safety by evacuation to the second floor.<br>From 150 to 200 people in neighboring area of Unosumai District run in the disaster mitigation centre containing second floor located in the district, however the survivor was about 30 people because from the first to second floor of the centre was devastated by Tsunami.<br>Mr. Furukawa who is refugee says "I would escaped from the event to hills if I could recognize the tsunami having higher than my understanding." Mr. Sakamoto who is fisherman says that we thought to not need to evacuate against the tsunami of 3 meters height because we have the complete sea walls for protection from a tsunami.<br>Death and missing people was over 1300 in Kamaishi City. |
| Ofunato City | They did not say concerning tsunami heights from the beginning, however, they called out the issued warning against major tsunami and evacuation to high ground area. | The tsunami height which attacked the Port of Ofunato was assumed at about 9.5 meters. | Death and missing people was over about 500 in Ofunato City. |
| Rikuzentakada City and Ohtsuchi Town | They could not recognize the broadcast situation on that time because the recording documents about them were washed away. | No description in articles. | No description in articles. |

■ Broadcasting from Municipal Disaster Management Radio Communication Network on Miyagi Prefecture

| | State of the broadcasting | Article related to Observed Tsunami | Evacuation in Responding to the Broadcast |
|---|---|---|---|
| Minami Sanriku Town | They called out through the Municipal Disaster Management Radio Communication Network just after the earthquake immediately that "6 meters height of tsunamis are coming" because the JMA issued the warning against major tsunami of 6 meters height from the beginning. | The actual tsunami height exceeded 15 meters. | There were many people who evacuated to high ground areas in accordance with the radio broadcasting. Many officers were dead because the entire the three-story building of the town's Crisis Management Department was submerged by the tsunami. |
| Kesennuma City | According to the head office of countermeasures on Kesennuma City, they called out the evacuation through the Municipal Disaster Management Radio Communication Network when the JMA issued the warning against major tsunami on the day. Although they did not have records whether they could give a lot of care by indicated specific tsunami heights, they say that "we thoroughly called out the evacuation to high ground areas in any case". | No description in articles. | No description in articles. |

Reference: The Asahi Shimbun Company Release [Online]. http://www.asahi.com/national/update/0420/TKY201104200249.html

Destruction by tsunami scouring

Destruction by wave pressure

Fig. III-1-15 Damages of seawall and harbor installation due to the tsunami.

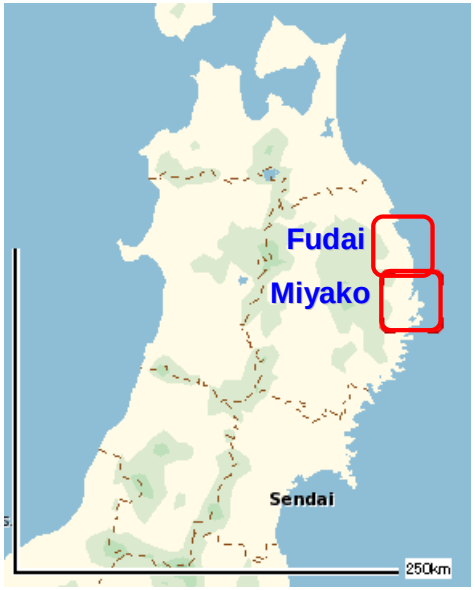

The 10m-high seawall was destroyed in Taro district, Miyako city, Iwate Pref.

The 15.5m-high seawall was undestroyed in Otabe district, Fudai village, Iwate Pref.

Fig. III-1-16 Difference of seawall heights resulting in different consequence.

A photo from the village's point of view (i.e. facing the coast)

A photo from a viewpoint of facing the village taken at the spot slightly below the stone monument

Fig. III-1-17 Photos of a stone monument and tsunami invading area below the stone monument.

## 2. Damage caused by the earthquake and tsunami hitting Fukushima NPSs

### (1) Seismic ground motion and tsunami height observed at Fukushima Dai-ichi NPS

#### 1) Matters related to seismic ground motion

##### a Seismic ground motion observation system and observation records

The seismic ground motion observation system of Fukushima Dai-ichi NPS, as shown in Figure III-2-1, consists of seismometers installed on the first basement and the second floor of the reactor buildings, seismometers in underground down-hole array (five seismometers in each part hole) at two parts in the south and north of the site and observation record device. Seismometers observe acceleration time history of two horizontal and vertical components.

Seismometers are installed at 53 points in Fukushima Dai-ichi NPS. Seismic ground motion was recorded at 29 points out of them. However, according to TEPCO's investigation, records of acceleration time history were interrupted at around 130 to 150 seconds at seven points. TEPCO's investigation revealed that the cause was failure of recoding device software.

Table III-2-1 shows the list of maximum acceleration of seismic ground motion observed in three components (east-west, north-south and vertical) at the base mat level of the reactor buildings. Maximum acceleration in horizontal direction was 550 Gal at Unit 2 (east-west) and that in vertical direction was 302 Gal at Unit 2.

##### b Comparison between standard seismic ground motion Ss and seismic ground motion observed

In the seismic back check, the standard seismic ground motion Ss (Ss-1 to Ss-3) are established to envelop the seismic ground motion caused by plate boundary earthquake off the coast of Fukushima Prefecture, intraslab earthquake[5] beneath the site, earthquake by capable fault around the site and possible earthquake from diffuse seismicity.
Table III-2-1 also shows maximum response acceleration to the standard seismic ground motion Ss at the site where seismometers were installed at the base mat level on the first

[5] Intraslab earthquake: The earthquake caused by a fault rupture within a descending oceanic crust.

basement level of the reactor buildings. The table shows that observed maximum acceleration is mostly smaller than maximum response acceleration to the standard seismic ground motion Ss. However, maximum acceleration observed in east-west direction at Units 2, 3 and 5 is somewhat larger than maximum response acceleration to Ss. Figure III-2-2(a) shows acceleration time history of east-west component at R/B in Unit 2.

Figure III-2-2(b) shows the comparison chart between the response spectra of observed seismic ground motion at the base mat level of the reactor building of Units 2, 3 and 5 and the response spectra at the base mat level of the building, inputting the standard seismic ground motion Ss into the base mat. The Figure shows that the response spectra of observation records of Units 2, 3 and 5 somewhat exceeds the response to Ss with a period of 0.2 to 0.3 second.

c Probabilistic seismic hazard assessment and exceedance probability of the standard seismic ground motion Ss

The Regulatory Guide for Reviewing Seismic Design of Nuclear Power Reactor Facilities was revised in 2006. Under the revised Guide, considering the residual risk, the standard seismic ground motion Ss exceedance probability is referred from the standpoint that the possibility of seismic ground motion exceeding the standard seismic ground motion Ss is undeniable. NISA instructed TEPCO to conduct seismic back check (evaluation of Ss adequacy and safety of facilities) based on revision of the Guide. TEPCO evaluated the standard seismic ground motion Ss exceedance probability according to the seismic hazard evaluation procedures of the Seismic PSA Implementation Standards of the Atomic Energy Society of Japan as a part of seismic back check, and reported to NISA.

Figure III-2-3 shows the seismic hazard for response spectra of Fukushima Dai-ichi NPS by exceedance probability. In the Figure, Ss-1H and Ss-2H response spectra are also shown. The figure shows exceedance probability of the standard seismic ground motion Ss is within the range of $10^{-4}$ to $10^{-6}$ per year.

2) Matters related to tsunami

a Tide level observation system and observed records

The tide level observation system consists of tide gauge and observation recording device. The tide gauge is installed in quiet area in harbor, and the tide level observation recoding device is installed in the data transfer building. According to the press conference of TEPCO (April 9), initial major tsunami arrived at around 15:27 (41 minutes later of mainshock occurrence) and water level was approximately 4 m height.

Though secondary major tsunami arrived at 15:35, the water level is unknown due to tide gauge failure. Maximum scale of the gauge is 7.5 m.

The site height of Fukushima Dai-ichi NPS is 10 m at Units 1 to 4, and 13 m at Units 5 and 6. At Fukushima Dai-ichi NPS, tsunami rushed from the offshore area in front of the site, and most part of the site where main buildings were placed was flooded. TEPCO reported about the flood height based on the results of trace investigation at flooding. The results of the report are shown in Figure III-2-4. The flood height of the ocean-side site such as reactor buildings of Units 1 to 4, turbine buildings, etc. is O.P. approximately +14 to 15 m at points H to K in the Figure(O.P.: Onahama Port base tide level for construction). Experts estimate that the water level of the tsunami caused by this earthquake is more than 10 m from the picture (refer to Fig. III-2-5) showing the overflow status of tsunami seawall (10 m) released by TEPCO.

The average ground subsidence level is approximately 0.8 m along the coast area of Miyagi to Fukushima prefectures in this earthquake, and it is necessary to consider that the site height may change by ground subsidence when hit by tsunami.

b Comparison between design basis tsunami height and observed tsunami height

As shown in Figure III-2-6, in the application document for establishment permit, subject tsunami source is Chile Earthquake (M9.5 in 1960) and the design basis tsunami water level is 3.1 m. In 2002, TEPCO evaluated the design tsunami height based on the “Tsunami Assessment Method for Nuclear Power Plants in Japan (2002)” of the Tsunami Evaluation Subcommittee, the Nuclear Civil Engineering Committee, Japan Society of Civil Engineers (Tsunami Assessment Method of JSCE; hereafter), assessing Fukushima-oki Earthquake (M7.9 in 1938) shown in Figure III-2-6 as M8.0 independently, and the highest water level of each Unit was set as 5.4 to 5.7 m. According to the evaluation, elevation of Unit 6 sea water pump motor for emergency

diesel generator was raised up 20 cm and also that of sea water pump motor for High Pressure Core Spray was raised up 22 cm.

Above Tsunami Assessment Method of JSCE is also reflected to IAEA Tsunami Hazard Guide as per DS417. However, the tsunami recurrence period is not identified in the method,

At the 32nd Joint Working Group for Earthquake, Tsunami, Geology, and Foundations under the Seismic and Structural Design Subcommittee (June 24, 2009) held in order to conduct examination related to earthquake, it was pointed out that although the investigation report about tsunami by the Jogan earthquake in 869 was made by National Institute of Advanced Industrial Science and Technology and Tohoku University, the earthquake causing the tsunami was not dealt with. Regarding this, NISA requested TEPCO at the 33rd Joint Working Group (July 13, 2009) to take into account the Jogan earthquake for evaluating design tsunami height when new knowledge on the tsunami of the Jogan earthquake is obtained.

c Probabilistic tsunami hazard evaluation and exceedance probability of design basis tsunami height

The Tsunami Assessment Subcommittee of JSCE is at work on consideration about probabilistic tsunami hazard analysis method. As a part of the consideration, the tsunami hazard assessment method and the trial assessment of tsunami exceedance probability(Fig. III-2-7) are already announced but not yet completed. Other trial assessment of tsunami hazard is also announced.

3) Matters related to damage

a Matters related to external power supply system outside the site

Figures III-2-8(a) and III-2-8(b) show the transmission network of external power supply of Fukushima Dai-ichi NPS and the damage situation. As shown in the Figures, the Okuma Nos. 1 and 2 power transmission lines (275 kV) from Shin Fukushima Power Substation connected to the normal high voltage switchboards of Units 1 and 2 via the switchyards for Units 1 and 2, and in addition, TEPCO nuclear line (66 kV) from Tohoku Electric Power Co., Inc. connected to the normal high voltage switchboard of Unit 1 via

the switchyards for Units 1 and 2.

As to Units 3 and 4, the Okuma Nos. 3 and 4 transmission lines (275 kV) connected to the normal high voltage switchboard of Units 3 and 4 via the switchyards for Units 3 and 4 as well. For Units 5 and 6, the Yorunomori Nos. 1 and 2 transmission lines (66 kV) connected to the normal high voltage switchboard of Units 5 and 6, too.

In addition, the normal high voltage switchboard of Unit 1, the normal high voltage switchboard of Unit 2, and the normal high voltage switchboard of Units 3 and 4 were connected mutually, and electric power interchange was possible. However, the switchyard for the Okuma No. 3 transmission line in the switchyards of Units 3 and 4 was under construction on the day when the earthquake occurred, and as a result, external transmission line in the total of six lines was connected to Fukushima Dai-ichi NPS.

The Shin Fukushima Power Substation is located approximately 8 km from the site, and the seismic intensity of this earthquake is estimated to be 6 upper.

The earthquake caused damage to the breakers of the switchyards of Units 1 and 2. As to TEPCO nuclear line (66 kV) from Tohoku Electric Power, although it's not possible to estimate the cause, cables were damaged. Concerning Units 3 and 4, in addition to the Okuma No. 3 transmission line under construction, the breakers of Nos. 3 and 4 transmission lines on the side of Shin Fukushima Power Substation failed. In addition, about Units 5and 6, one transmission line tower (No. 27 tower) connecting to the switchyards of Units 5 and 6 was collapsed. So, as a result, although damage caused by tsunami was not clear, all external power supplies of Units 1 to 6 were lost.

b Sea water system pump and emergency power supply system in the site

As to the sea water pump facilities for component cooling (height: 5.6 to 6 m) at Fukushima Dai-ichi NPS, all Units were flooded by tsunami as shown in Figure III-2-4.

Whether or not they were damaged by wave power is under investigation. In addition, the Emergency Diesel Generators and switchboards installed in the basement floor of the reactor buildings and the turbine buildings (height: 0 to 5.8 m) were flooded except for Unit 6, and the emergency power source supply was impossible. Regarding Unit 6, two out of three Emergency Diesel Generators were installed in the first basement of the

reactor building and flooded, but one Generator installed on the first floor of Diesel Generator building was not flooded and the emergency power supply was possible.

(2) Seismic ground motion and tsunami observed at Fukushima Dai-ni NPS

1) Matters related to seismic ground motion

a Seismic ground motion observation system, and observation records and observation seismic ground motion

The seismic ground motion observation system of Fukushima Dai-ni NPS is basically similar to that of Fukushima Dai-ichi NPS previously mentioned in 2 (1). The seismometers were installed at 43 points in Fukushima Dai-ni NPS. All of these seismometers recorded the acceleration time history data of the seismic ground motion by this earthquake. However, as well as Fukushima Dai-ichi NPS, recording of acceleration time history was interrupted at around 130 to 150 seconds at 11 points due to failure of recoding device software.

Table III-2-2 shows maximum response acceleration to the standard seismic ground motion Ss at the site where seismometer installed at the base mat level on the first basement level of the reactor building. Maximum acceleration in horizontal direction was 277 Gal at Unit 3 (north-south direction) and that of vertical direction was 305 Gal at Unit 1.

b Comparison between standard seismic ground motion Ss and seismic ground motion observed

The standard seismic ground motion Ss (Ss-1 to Ss-3) are established to envelop the seismic ground motion caused by plate boundary earthquake off the coast of Fukushima Prefecture, intraslab earthquake beneath the site, earthquake by capable fault around the site and possible earthquake from diffuse seismicity. Table III-2-2 shows maximum response acceleration to the standard seismic ground motion Ss at the site where seismometers were installed at the base mat level on the first basement level of the reactor buildings. The table also shows that maximum acceleration of observation records of all Units were smaller than maximum response acceleration to the standard seismic ground motion Ss.

Figure III-2-9 shows the acceleration time history and the response spectra of observed seismic ground motion at the base mat level of the reactor building of Unit 3 whose acceleration in horizontal direction was highest. The figure also shows the response spectra on the base mat level inputting the standard seismic ground motion Ss into the base mat.

The figure implies that the response spectra obtained from observation records fall below the response spectra inputting the standard seismic ground motion Ss

c Probabilistic seismic hazard assessment and exceedance probability of the standard seismic ground motion Ss

Figure III-2-10 shows the seismic hazard for response spectra of Fukushima Dai-ni NPS by exceedance probability. The response spectra of Ss-1H and Ss-2H are also shown. The Figure shows that the exceedance probability of the standard seismic ground motion Ss is within the range of $10^{-4}$ to $10^{-6}$ per year.

2) Matters related to tsunami

a Tide level observation system and observed records

The tide level observation system of Fukushima Dai-ni NPS is basically similar to that of Fukushima Dai-ichi NPS previously mentioned in section 2.(1). According to the press conference of TEPCO on Apr. 9, initial major tsunami arrived at around 15:23 (37 minutes later of mainshock occurrence) and next major tsunami 15:35. After that, it is not known for tsunami arrivals.

Because the tide gauge was damaged, the observation records were not preserved. As a result, tsunami time history and maximum water level were not clear.

TEPCO reported about the flood height based on the results of trace investigation at flooding as well as Fukushima Dai-ichi NPS previously mentioned in section 2.(1). Figure III-2-11(a) shows the report results. Fukushima Dai-ni NPS consists of the ocean-side area where seawater pumps, etc. are installed and the raised mountain-side area where reactor buildings, turbine buildings, etc. are installed. Tsunami at first flooded

from the ocean-side area in front of the site. Afterward, as shown in the Figure, tsunami flooded from the narrow space between the south side of Unit 1 and the slope in the mountain-side area, and reached the back of the mountain-side area. There was no flooding except from the narrow place. The flood height in the ocean-side area was O.P. approximately +6.5 to 7 m, and O.P. approximately +14 to 15 m in the mountain-side area where O.P. means base level of Onahama Port construction).

b Comparison between design basis tsunami height and observed tsunami height

In the application document for construction permit , subject tsunami source is Chile Earthquake (M9.5 in 1960) and the design basis tsunami height of each Unit is 3.1 to 3.7 m as well as Fukushima Dai-ichi NPS. In the previously mentioned assessment based on the Tsunami Assessment Method for Nuclear Power Plants in Japan (2002), Fukushima-oki Earthquake (M7.9 in 1938) was assessed as M8.0 as well as Fukushima Dai-ichi NPS, and the design height of each Unit was 5.1 to 5.2 m.

3) Matters related to damage

a Matters related to external power supply system outside the site

The transmission network of external power supply of Fukushima Dai-ni NPS contain four lines including two lines of the extra high voltage switchyard on the site used in combination among Units 1 to 4 and the Tomioka Nos. 1. and 2 transmission lines outside the site (500 kV), and two line of the Iwaido Nos.1 and 2 transmission line (66 kV), and they connect to Shin Fukushima Power Substation, 8km upper, and in addition, connect to Shin Iwaki Switchyard, approximate 40 km upper. Out of transmission lines, Iwaido No.1 had been stopped power supply for maintenance.

The seismic intensity in the area around Shin Fukushima Power Substation is estimated to be 6 upper. The Tomioka No. 2 transmission line (500 kV) and the Iwaido No. 2 transmission line (66 kV) to Units 1 to 4 of Fukushima Dai-ni NPS stopped transmission due to failure restoration of devices on the side of the switchboard, etc. The Tomioka No. 2 transmission line (500 kV) and the Iwaido No. 2 transmission line (66 kV) to Units 1 to 4 of Fukushima Dai-ni NPS stopped transmission due to failure restoration of devices on the side of the switchboard, etc. caused by strong ground motion in this earthquake.

However, the power supply to Units 1 to 4 was continued since the Tomioka No. 1 transmission line could supply electric power.

b Sea water system pump and emergency power supply system in the site

The sea water pump facilities for component cooling of all Units (height: 6 m) were flooded by tsunami except Unit 3, which was not flooded and kept its function.

The Emergency Diesel Generator installed in the basement of the reactor buildings (height: 0 m) kept its function for Unit 3 and 4, however, it for the other Units lost its function by completely flooding (Fig. III-2-11(b)).

As shown above, the sea water pump facilities for component cooling and the emergency diesel generator kept those functions only for Unit 3.

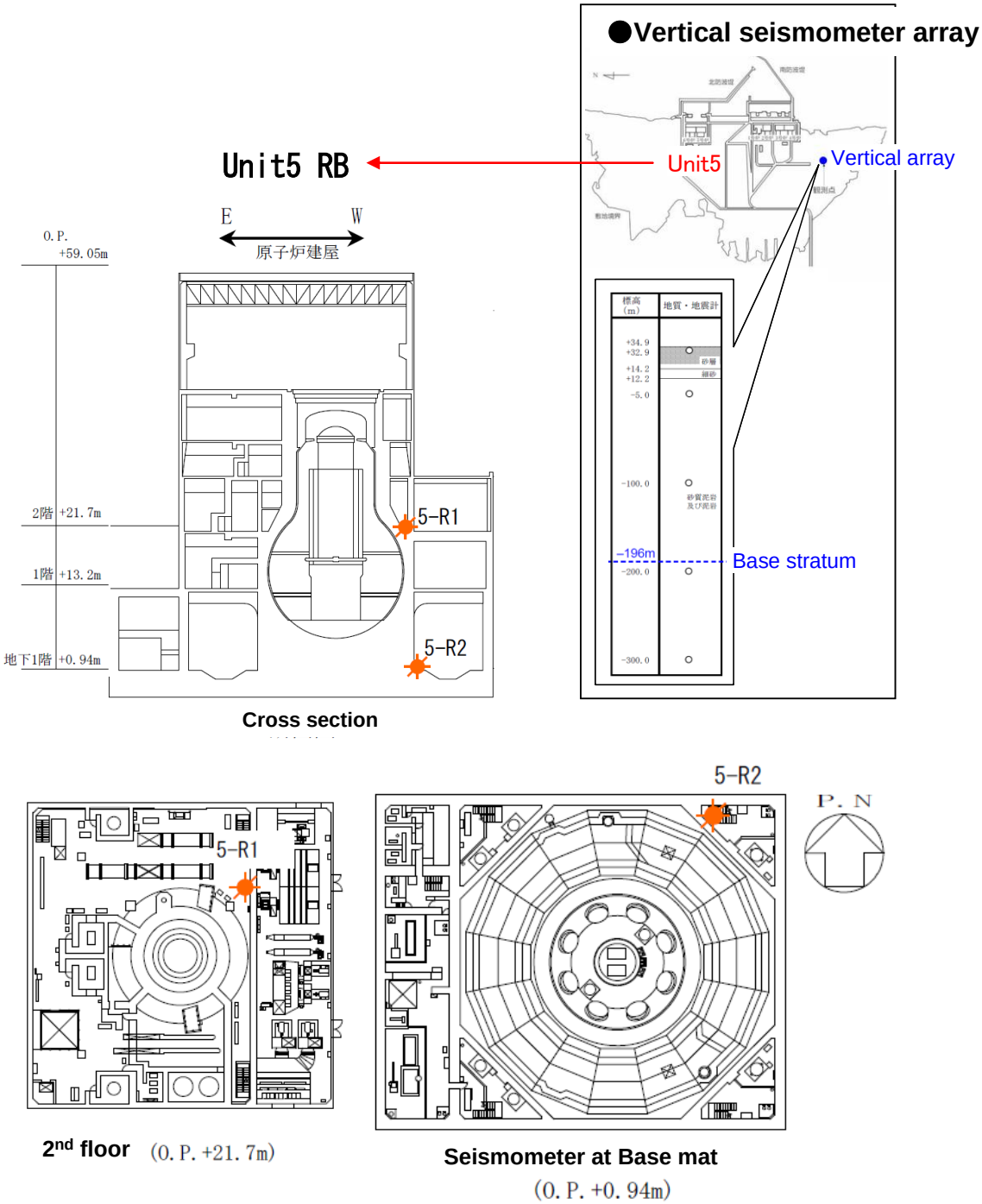


Fig. III-2-1 Deployment of seismometers at Fukushima Dai-ichi NPS and R/B in unit 5.

Table III-2-1 Max. acceleration values observed in reactor buildings at Fukushima Dai-ichi NPS.

| Loc. of seismometer (bottom floor of reactor bld.) | | Record*1 Max. acc. (Gal) | | | Max. response acceleration to the DBGM Ss (Gal) | | |
|---|---|---|---|---|---|---|---|
| | | NS | EW | UD | NS | EW | UD |
| Fukushima Dai-ichi | Unit 1 | 460*2 | 447*2 | 258*2 | 487 | 489 | 412 |
| | Unit 2 | 348*2 | 550*2 | 302*2 | 441 | 438 | 420 |
| | Unit 3 | 322*2 | 507*2 | 231*2 | 449 | 441 | 429 |
| | Unit 4 | 281*2 | 319*2 | 200*2 | 447 | 445 | 422 |
| | Unit 5 | 311*2 | 548*2 | 256*2 | 452 | 452 | 427 |
| | Unit 6 | 298*2 | 444*2 | 244 | 445 | 448 | 415 |

***1 These are temporal values, and may be corrected later.**
***2 Each recording was interrupted at around 130-150 s from recording start time.**

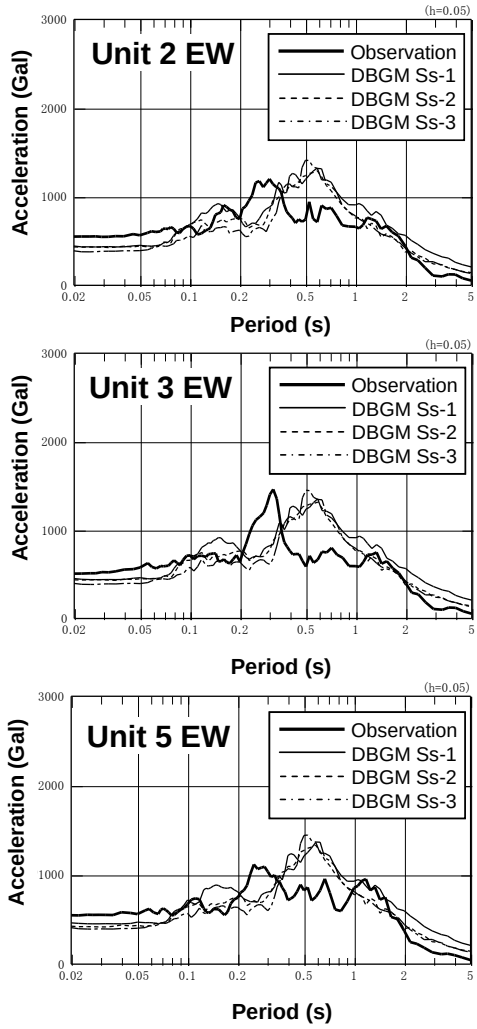


Fig. III-2-2(b) Response spectra on the base mats at R/Bs at Fukushima Dai-ichi NPS.

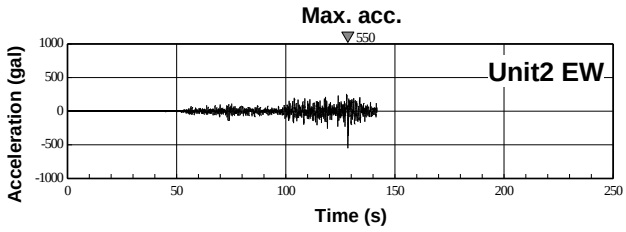


Fig. III-2-2(a) Acceleration seismogram on the base mat at R/B in Unit-2 at Fukushima Dai-ichi NPS.

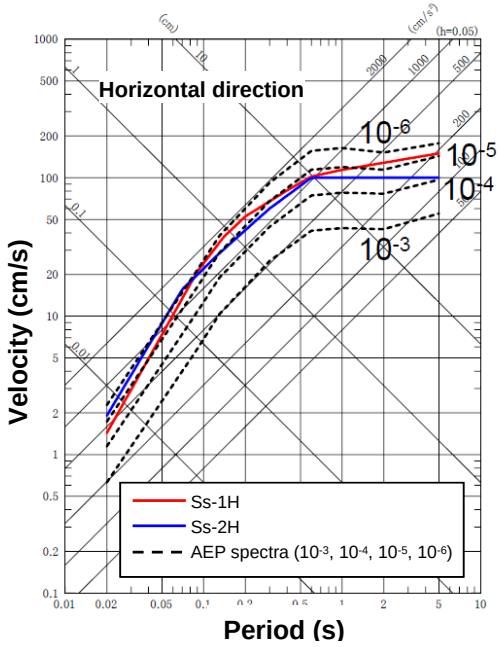


Fig. III-2-3 Annual exceedence probability (AEP) of DBGM Ss for Fukushima Dai-ichi NPS.

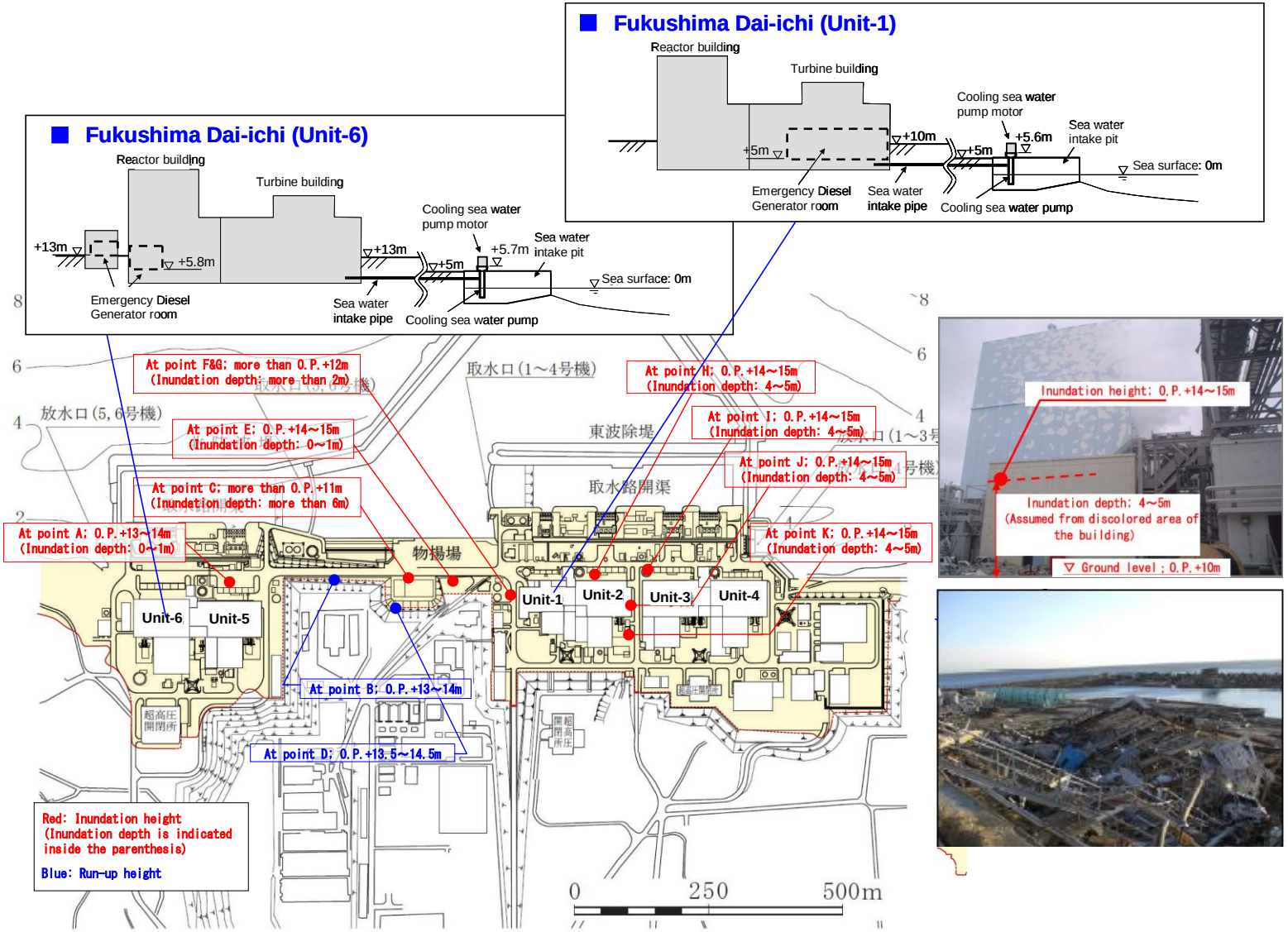


Reference: The Tokyo Electric Power Co., Inc. Release [Online]. http://www.tepco.co.jp/en/press/corp-com/release/betu11_e/images/110409e9.pdf
Partially modified by JNES.

Fig. III-2-4(a) Damage of Fukushima Dai-ichi NPS due to the tsunami.

Reference: The Tokyo Electric Power Co., Inc. Release [Online].http://www.tepco.co.jp/tepconews/pressroom/110311/index-j.html

Fig. III-2-4(b) Photos showing plant damages at the Fukushima Dai-ichi NPS.

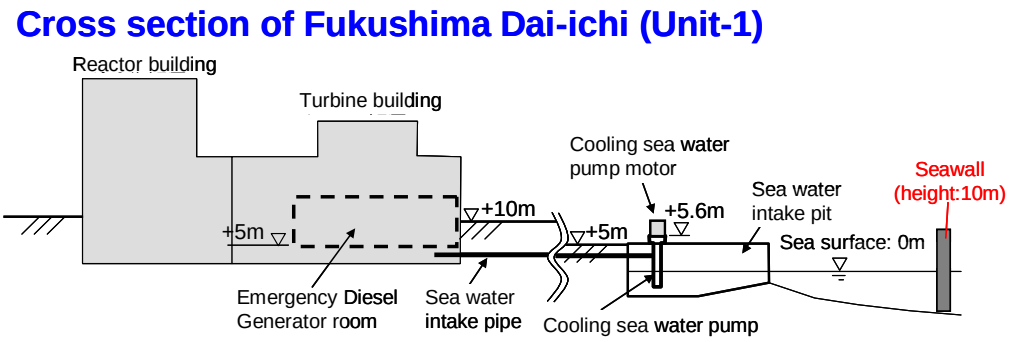

Reference: The Tokyo Electric Power Co., Inc. Release [Online].http://www.tepco.co.jp/tepconews/pressroom/110311/index-j.html

Fig. III-2-5 Tsunami getting over seawall at the Fukushima Dai-ichi NPS.

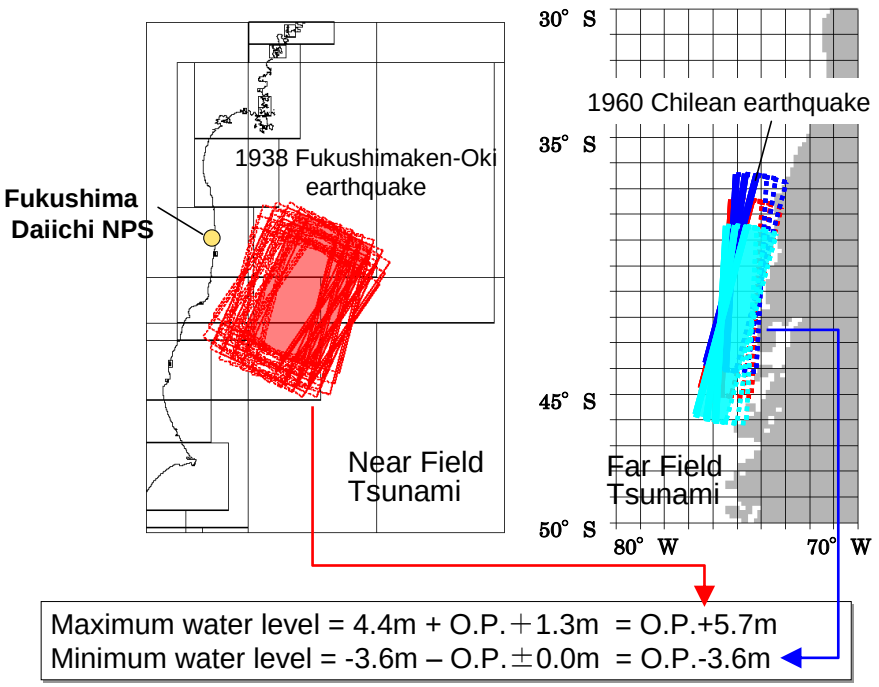


Reference: Takao (2010) [Online].
http://www.jnes.go.jp/seismic-symposium10/presentationdata/3_sessionB/B-11.pdf
Partially modified by JNES.

Fig. III-2-6 Design tsunami level evaluated by TEPCO for the Fukushima Dai-ichi NPS.

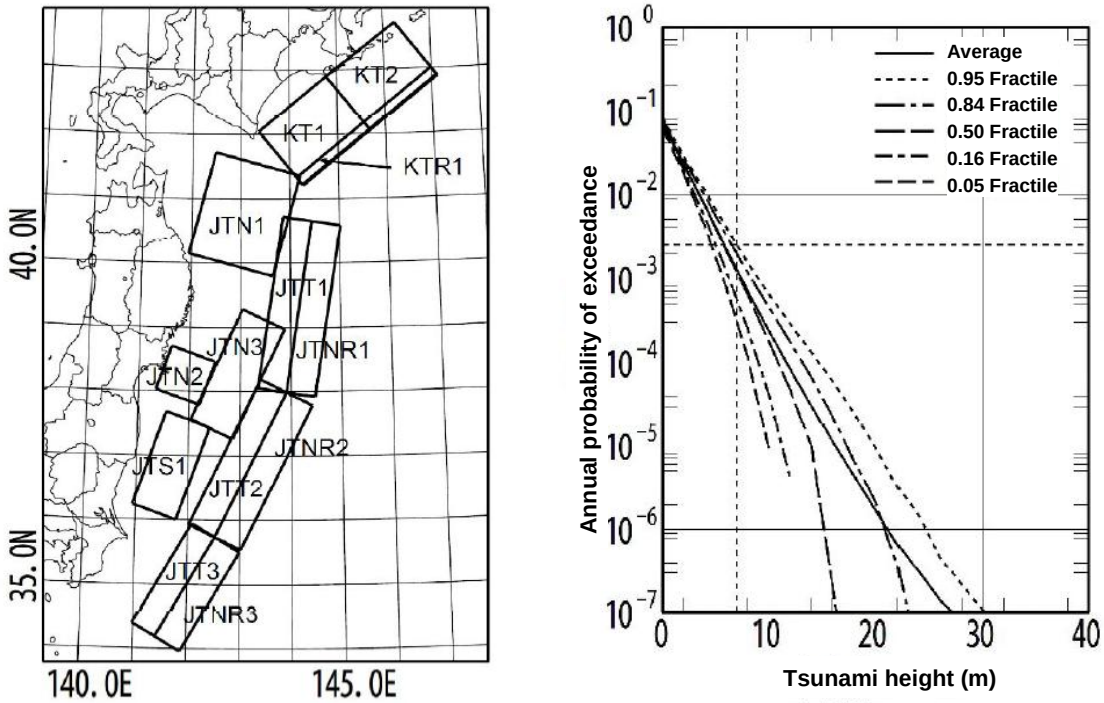


Reference: The Tsunami Evaluation Subcommittee, The Nuclear Civil Engineering Committee, JSCE (2010)
[Online].http://www.jstage.jst.go.jp/article/jscejb/63/2/168/_pdf/-char/ja/

Fig. III-2-7 Evaluation results of tsunami hazard curves based on near- and far-field tsunami sources for Yamada villages, Iwate Pref..

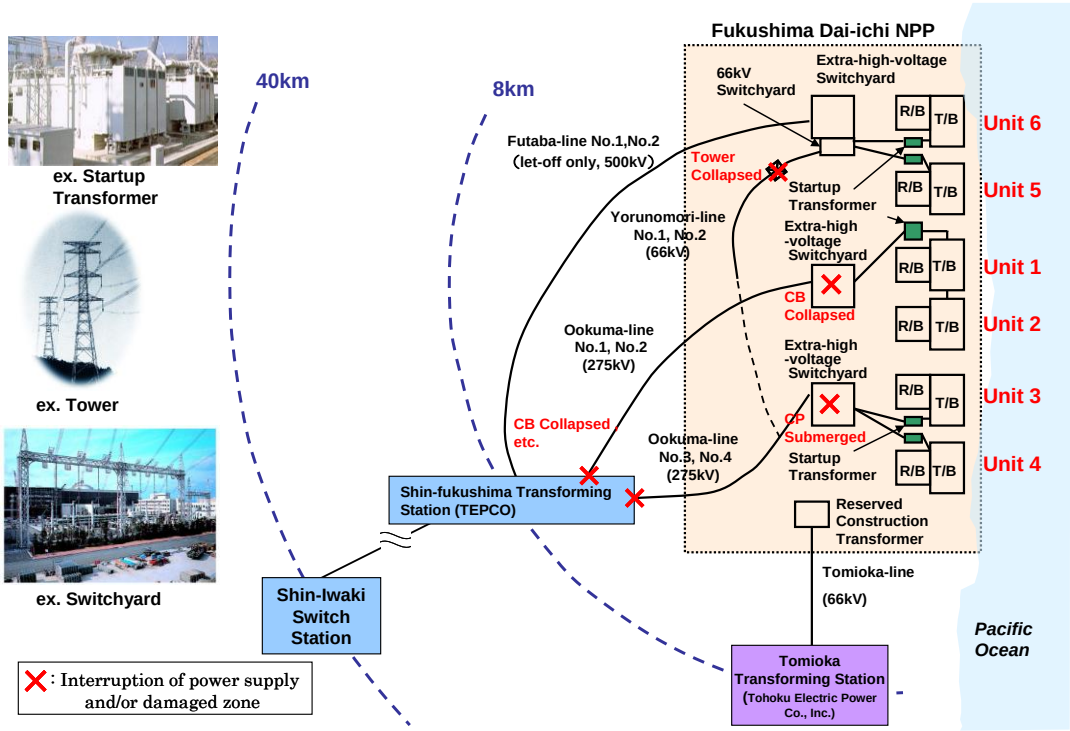


Reference: The Tokyo Electric Power Co., Inc. Release
[Online]. http://info.nicovideo.jp/pdf/2011-03-18_1930_touden_genpatsu.pdf
http://www.tepco.co.jp/nu/kk-np/info/tohoku/pdf/23032202.pdf

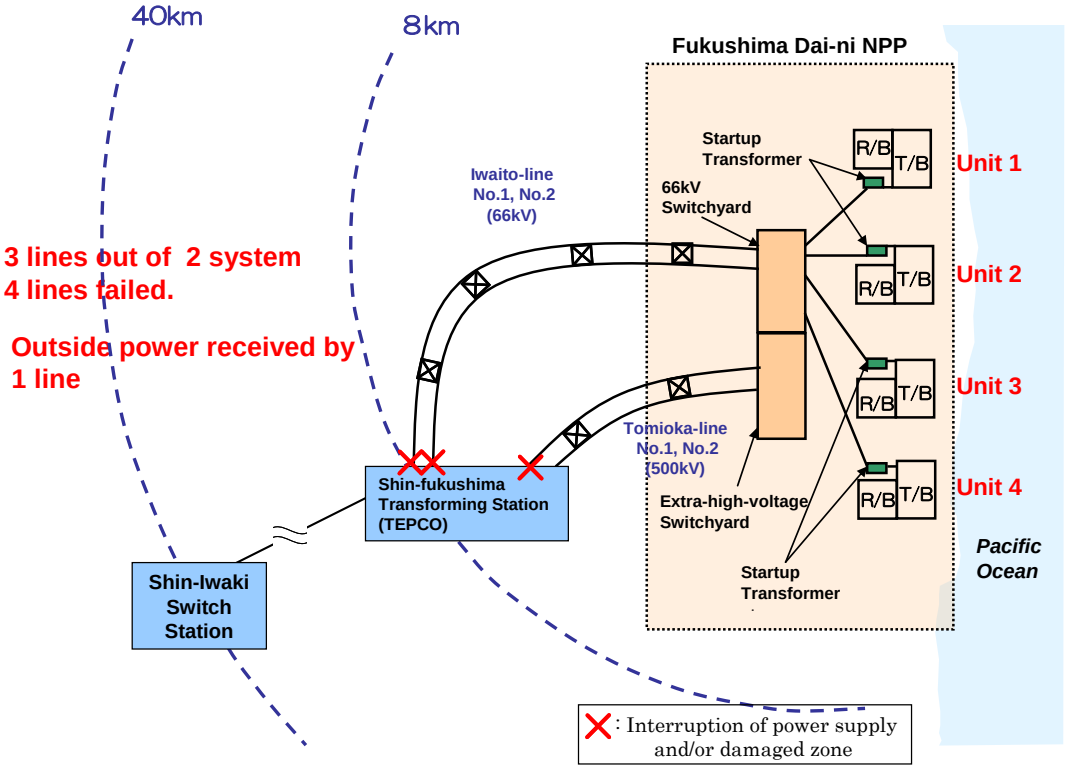


Reference: The Tokyo Electric Power Co., Inc. Release
[Online]. http://www.tepco.co.jp/nu/kk-np/tiiki/pdf/230325.pdf

Fig. III-2-8(a) Damage of external power supply systems for the Fukushima Dai-ichi and Dai-ni NPSs (1).

撮影：東京電力株式会社 H23.3.23

Okuma line 1L (O-81)
Circuit Breaker damaged

撮影：東京電力株式会社 H23.3.23

Okuma line 2L (O-81)
Circuit Breaker damaged

撮影：東京電力株式会社 H23.3.12

Okuma line 3L, Ground wire (disconnected)

撮影：東京電力株式会社 H23.3.11

Okuma line 3L & 4L, Steel structure for lead-in (tilted)

撮影：東京電力株式会社 H23.3.12　撮影：東京電力株式会社 H23.3.12

Yorunomori line, Cable in substation (subsidence)

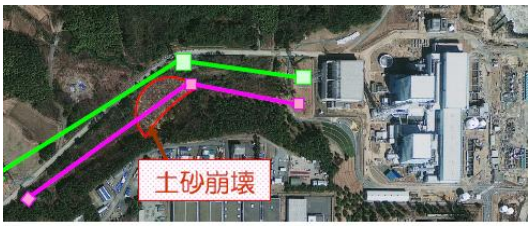


©GeoEye

Landslide of slope

Overview of landslide

Collapsed tower

Reference: The Tokyo Electric Power Co., Inc. Release
[Online]. http://www.tepco.co.jp/en/press/corp-com/release/betu11_e/images/110516e23.pdf
http://www.tepco.co.jp/en/press/corp-com/release/betu11_e/images/110516e19.pdf
http://www.tepco.co.jp/en/press/corp-com/release/betu11_e/images/110516e20.pdf

Fig. III-2-8(b) Damage of external power supply systems of the Fukushima Dai-ichi and Dai-ni NPSs (2).

Table III-2-2 Max. accelerations values observed in reactor buildings at the Fukushima Dai-ni NPS.

| Loc. of seismometer (bottom floor of reactor bld.) | | Record*1 Max. acc. (Gal) | | | Max. response acceleration to the DBGM Ss (Gal) | | |
|---|---|---|---|---|---|---|---|
| | | NS | EW | UD | NS | EW | UD |
| Fukushima Dai-ni | Unit 1 | 254 | 230*2 | 305 | 434 | 434 | 512 |
| | Unit 2 | 243 | 196*2 | 232*2 | 428 | 429 | 504 |
| | Unit 3 | 277*2 | 216*2 | 208*2 | 428 | 430 | 504 |
| | Unit 4 | 210*2 | 205*2 | 288*2 | 415 | 415 | 504 |

***1 These are temporal values, and may be corrected later.**
***2 Each recording was interrupted at around 130-150 s from recording start time.**

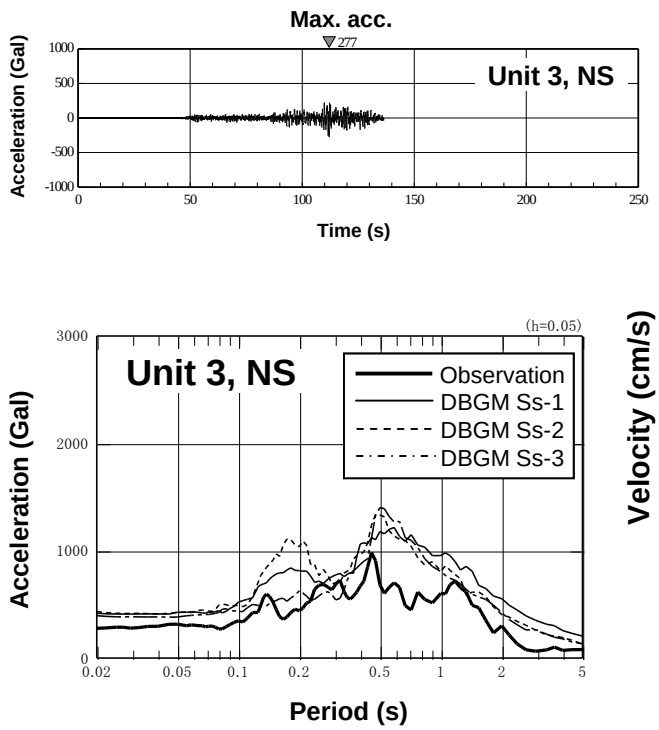


Fig. III-2-9 Acceleration seismogram and response spectra on the base mat at R/B in Unit-3 at the Fukushima Dai-ni NPS.

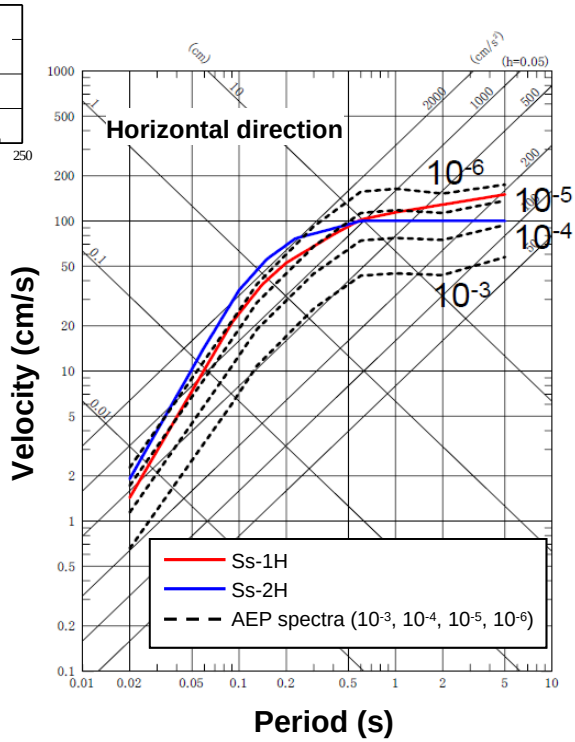


Fig. III-2-10 Annual exceedance probability (AEP) of DBGM Ss for the Fukushima Dai-ni NPS.

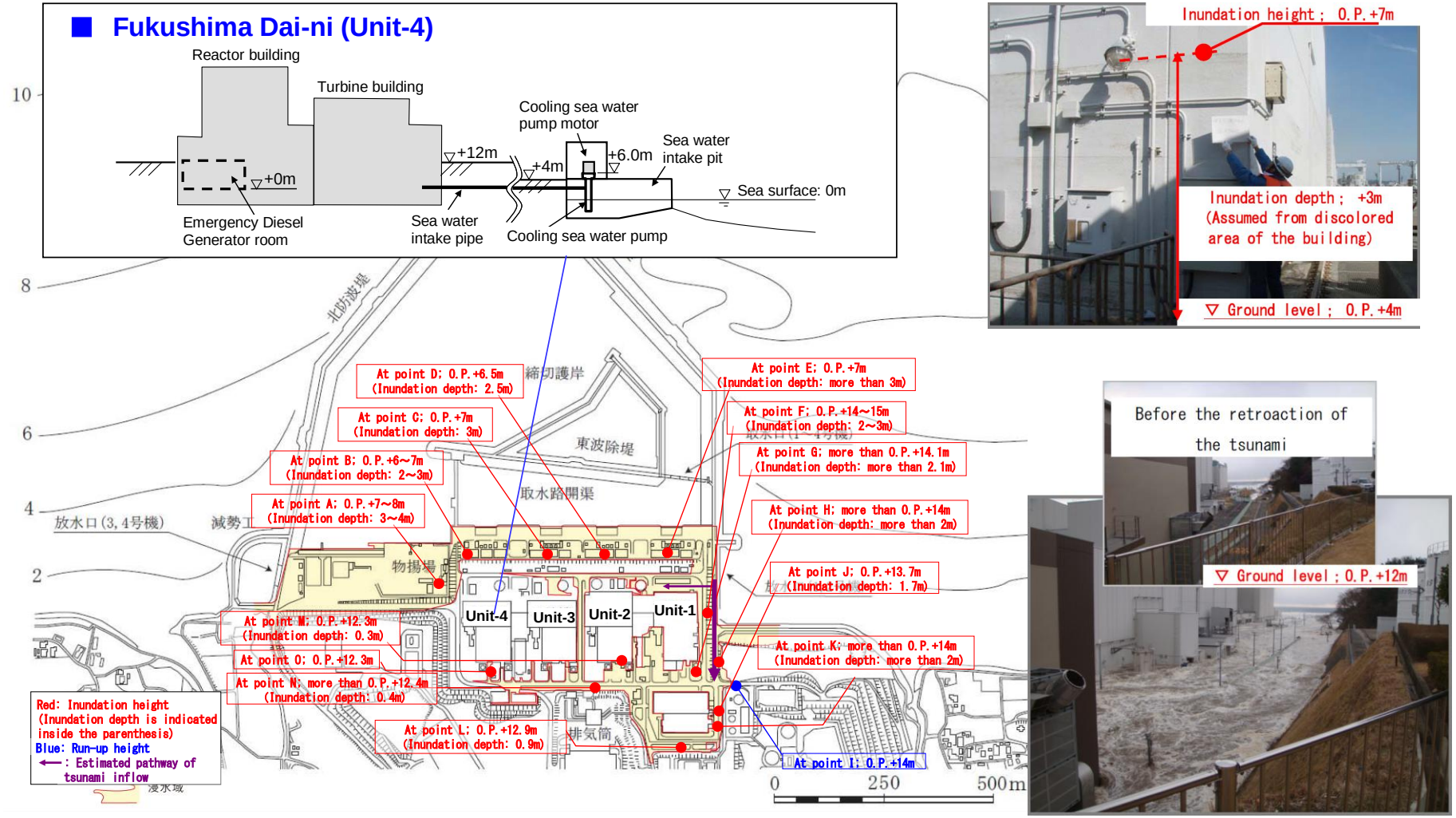


Reference: The Tokyo Electric Power Co., Inc. Release [Online]. http://www.tepco.co.jp/en/press/corp-com/release/betu11_e/images/110409e10.pdf
Partially modified by JNES.

Fig. III-2-11(a) Damage of Fukushima Dai-ni NPS due to the tsunami.

Damages of heat exchanger room and heat exchanger (Unit 1)

Damages of reactor building and emergency diesel generator (Unit 1)

Fig. III-2-11(b) Damage of Fukushima Dai-ni NPS due to the tsunami.

## 3. Seismic and tsunami damage to other NPSs

### (1) Seismic ground motion and tsunami height observed at Onagawa NPS

#### 1) Seismic ground motion

a Seismic ground motion observation system, its observation records and observed ground motions

The seismic observation system is composed of seismometers and recording devices. Seismometers are installed at four points (on the rooftop, the refueling floor, i.e. the 5th floor, the 1st floor and the base mat) of the reactor building of Unit 1, at four points (the same as of Unit 1, except the refueling floor, i.e. the 3rd floor) of Unit 2, and at four points (the same as of Unit 2) of Unit 3, respectively. They are also installed at the upper part of the bedrock on the site (representing the base stratum). These seismometers are designed to observe acceleration time history of two horizontal and one vertical components.

Table III-3-1 shows the maximum acceleration values of seismic ground motions in three components, i.e. horizontal east-west and north-south and vertical components, which were observed on the base mats of the reactor buildings. On the base mat level, the maximum horizontal acceleration value was 607 Gal at Unit 2 (in the north-south direction), and the maximum vertical acceleration value was 439 Gal at Unit 1.

b Comparison between standard seismic ground motion Ss and observed seismic ground motion

The standard seismic ground motion Ss (Ss-B, Ss-D and Ss-F) is established to envelop the seismic ground motions of an assumed consecutive Miyagi-ken Oki earthquake, intraslab earthquake beneath the site, and the possible earthquake from diffuse seismicity.

Table III-3-1 shows the maximum response acceleration values for the standard seismic ground motion Ss at the level of seismometers located inside the buildings. It can be seen that most of the observed maximum acceleration values are below the maximum response acceleration for the standard seismic ground motion Ss. However, the observed maximum acceleration values on the base mat level at Unit 1 (in the east-west and

north-south directions), Unit 2 (in the north-south direction), and Unit 3 (in the north-south direction) somewhat go beyond the maximum response acceleration for the standard seismic ground motion Ss. The observed vertical maximum acceleration values on the base mat level at all units are below the maximum response acceleration for the standard seismic ground motion Ss.

Figure III-3-1 shows a comparison between response spectra of the observed seismic ground motions at the upper part of the bedrock on the site and response spectra for the standard seismic ground motion Ss. Response spectra of the observed seismic ground motions exceed response spectra for the standard seismic ground motion Ss in the periodic band between 0.2 and 1.0 sec.

c Probabilistic seismic hazard assessment and exceedance probability of standard seismic ground motion Ss

Figure III-3-2 shows the evaluation of the annual exceedance probability of DBGM Ss for Onagawa NPS. Response spectra for Ss-Dh are also shown in the figure. The exceedance probability for Ss is between $10^{-3}$ and $10^{-5}$ per year.

2) Tsunami

a Tide level observation system and observed records

The tide level observation system is composed of a tide gauge and recording devices. The tide gauge is installed in a quiet area in the harbor, and the tsunami recording devices are installed in the buildings.

Figure III-3-3 shows the tsunami time history recorded by the tide gauge. From the record, it can be seen that the first big wave arrived at about 15:29 (43 min after the main shock). The observed tsunami height was about 13 m relative to O.P. (O. P.: the reference surface for construction of Onagawa NPS), which did not exceed the height of the site, i.e. 13.8 m relative to O.P. (the real height of the site is 14.8 m, adjusted to sinking by about 1 m due to crustal deformation, according to the Geographical Survey Institute QE, see Figure III-3-4). Although seawater was found to have entered the sea-facing side of the site, it did not reach the major buildings.

b Comparison between design basis tsunami height and observed tsunami height

The design basis tsunami height is evaluated as 9.1 m, for the Keicho Sanriku Earthquake (M8.6 in 1611), according to the application for establishment permit, and as 13.6 m, for the Meiji Sanriku Earthquake (M8.3 in 1896), based on the tsunami evaluation method of the Japan Society of Civil Engineers (2002) mentioned previously. Thus, the design basis tsunami heights were higher relative to those tsunami height observed above.

3) Damage

a External power supply

Units 1 to 3 are connected to a transmission network: two power lines of 275 kV system from the Ishinomaki transforming station, about 25 km away from the site; two power lines of 275 kV system from the Miyagi central switchyard, about 65 km away from the site; and one power line of 66 kV system from the Onagawa nuclear transforming station.

The seismic intensity of the main shock was estimated to be upper 6 (in Japanese scale) near the Ishinomaki transforming station, and lower 6 near the Miyagi central switchyard. The power transmission from three lines of the 275 kV systems and one line of the 66 kV system were disrupted due to the seismic ground motion. Of the power receiving equipment on the NPS site, a start up transformer of Unit 1 failed, thereby losing its function. On March 12, as the start up transformer came back online, the power was switched to the external regular power supply (275 kV) and the normal power supply system was returned.

b Seawater pump and emergency power supply

Figure III-3-5(a) and Figure III-3-5(b) show the layout of intake channel, seawater pump, seawater pump room, and heat exchanger room of the component cooling system. As shown in the figure, the seawater pump room is located on the higher site, which is 14.8 m high, about 100 m away from the coast, and is structurally designed to prevent being submerged by a run-up tsunami. Inside the room, the tide gauge is installed with an opening. This tide gauge is designed to allow the automatic stop of the seawater pimp in short of seawater due to the backrush of a tsunami.

The observed tsunami height was 13 m, and despite the land sinking, the tsunami did not cause the seawater pump room (on the site as high as 13.8 m, adjusted to sinking by about 1 m) to be directly submerged. However, as the water level rose due to the tsunami, the water level in the underground intake pit also rose as shown in Figure III-3-5, caused by the siphon phenomenon. This resulted in seawater overflowing through the opening of the tide gauge into the seawater pump room. Then the seawater flowed from the pump room, via the trench, into the basement floors of the reactor buildings, causing the heat exchanger room of the component cooling water system in the second basement to be submerged. In addition, the component cooling water pump of Unit 2 was also submerged, which thereby caused the cooling function of emergency diesel generators to be lost, with two units stopped out of those three generators.

Tohoku Electric Power Company Inc. took measures to prevent the piping penetrations and the cable tray penetrations from the seawater pump room to the trench from being submerged. They stated that the company would remove the water gauge in the seawater pump room and relocate it to an improved area to prevent exposure to water, and they would also set up a flood barrier around the seawater pump room.

4) Integrity assessment of the reactor buildings in the main shock and its aftershocks

a In the wake of the main shock

Response spectra observed on the position corresponding to the surface of the base stratum exceeded response spectra of the standard seismic ground motion Ss in a certain periodic band.

NISA directed Tohoku Electric Power Company Inc. to prepare an “inspection and evaluation plan” of equipments and piping systems by Unit and implement the plan.

Tohoku Electric Power Company conducted an integrity assessment of the reactor buildings, based on the same procedures as the integrity assessment for the building structure of the Kashiwazaki-Kariwa Nuclear Power Station after the Chuetsu-oki Earthquake in July 2007. The response analyses on the reactor buildings of Units 1 to 3 were made with the observed acceleration records as the input of seismic ground motion. Figure III-3-6 shows the shear strain and shear force at the building by floor for each Unit. It can be seen that shear strain at each floor was below the JEAG4681-2008

evaluation criteria ($2.0\times10^{-3}$), and shear force was also below the elasticity limit. A ratio between the evaluation criteria and shear strain results at each floor was around 2.5 to 5.6.

JNES has conducted an integrity assessment of the reactor buildings of Units 1, 5, 6 and 7 at the Kashiwazaki-Kariwa Nuclear Power Station in wake of the Chuetsu-oki Earthquake. The ratio between the evaluation criteria and shear strain was the same or more as the above.

b In the wake of the aftershocks

An aftershock on April 7 around the Onagawa NPS had a magnitude of 7.1, at a depth of about 66 km, and was estimated to be an intraslab earthquake. NISA directed Tohoku Electric Power Company, as of April 13, to analyze the seismic observation data obtained from the aftershock, and confirm the seismic safety of important safety-related equipments. Tohoku Electric Power Company, as of April 25, reported the analysis results of the above seismic observation data. The report stated that: the observed maximum vertical acceleration at the Unit 2 reactor building (on the 3rd floor, the rooftop) and the Unit 3 reactor building (on the 3rd floor) exceeded the maximum response acceleration for the standard seismic ground motion Ss; the observed response spectra exceeded horizontal response spectra for the standard seismic ground motion Ss in a certain periodic band; and the reactor buildings maintained their functions.

(2) Seismic ground motion and tsunami height observed at Tokai Dai-ni NPS

1) Seismic ground motion

a Seismic ground motion observation system, observation records and observed ground motions

The seismic observation system is composed of seismometers and recording devices, and is installed at eight points (one on the 5th, 4th and 2nd floors, respectively, and five on the base mat of the second basement) of the reactor building. These seismometers are designed to observe the time history of seismic acceleration in two horizontal and vertical directions.

Table III-3-2 shows maximum acceleration values of observed seismic ground motions,

in horizontal and vertical directions, at the reactor building. On the base mat level, maximum horizontal acceleration was 214 Gal (north-south direction), and maximum vertical acceleration was 189 Gal.

b Comparison between standard seismic ground motion Ss and observed seismic ground motion

Standard seismic ground motion Ss (Ss-D and Ss-1) is decided to envelop the seismic ground motions of an interplate earthquake in Kashima-nada, an intraslab earthquake in the south of Ibaraki Prefecture, earthquakes caused by near-field active faults and possible earthquake from diffuse seismicity.

Maximum acceleration of the observed seismic ground motions was below maximum response acceleration for the standard seismic ground motion in application document for construction approval (Hereinafter, referred to as the design basis seismic wave in application document for construction approval) and the standard seismic ground motion Ss for the purpose of seismic back-check. Floor response spectra observed on the second basement to 6th floors exceeded floor response spectra for the design basis seismic wave at the construction approval in a certain periodic band (between about 0.65 and 0.9 sec.). However, spectra of observed seismic ground motion was below that for the design basis seismic wave at the construction approval around equipment important to seismic design and main equipment in the piping system having their own natural periods.

c Probabilistic seismic hazard assessment and exceedance probability of standard seismic ground motion Ss

Figure III-3-7 shows the evaluation of the annual exceedance probability of DBGM Ss for Tokai Dai-ni NPS. Response spectra for Ss-$D_H$ are also shown here. It can be seen that the exceedance probability for standard seismic ground motion Ss is approximately between $10^{-4}$ and $10^{-5}$ per year.

2) Tsunami

a Tide level observation system and observed records

The tide level observation system is composed of a tide gauge and recording devices. The tide gauge is installed in a moderate wave area in the harbor, but there was no record

of tide gauge because the tsunami's height exceeded its measurement scale and the power supply was disrupted from 16:40, March 11 onwards. Therefore, the tsunami height along the coast near the Tokai Dai-ni is unknown. The first big wave arrived at about 15:15 (30 min after main shock), the water level was 5.4 m.

Japan Atomic Power Co. has been surveying traces of how high the tsunami ran up on the NPS site. The results are shown in Figure III-3-8. The tsunami marked traces as high as H.P. + 5.9 m (5.0 m above sea level, H.P.: the reference surface for construction of Hitachi Port) to H.P. +6.3 m (5.4 m above sea level, provisional). Based on these findings, the height of the run-up tsunami was estimated to be approximately H.P. +6.3 m (5.4 m above sea level, provisional). The tsunami did not reach H.P. +8.9 m (8 m above sea level), on which the major buildings are located.

b Relation between design basis tsunami height and tsunami observed height

Design basis tsunami height is not contained in the application document for establishment permit. It is determined as H.P. +5.8 m (4.9 m above sea level), for the Boso-oki Earthquake (M8.2 in 1677), based on the tsunami evaluation method of the Japan Society of Civil Engineers (2002).

3) Damage

a External power supply

The Tokai Dai-ni Nuclear Power Station is connected to the following transmission network: two 275 kV power lines from the Naka substation, about 15 km away from the site; and as external backup power, one 154 kV power system from the Ibaraki substation, about 8 km away from the site, via the Tokai switchyard.

The seismic intensity was estimated to be upper 6 (in Japanese scale) near the Naka substation, and lower 6 near the Ibaraki substation. Immediately after the quake, the Naka substation and the Ibaraki substation stopped functioning due to the seismic ground motion, resulting in disrupted transmission of all lines. Of the power receiving equipment on the NPS site, a main transformer and a starting transformer experienced leakage of insulation oil. On March 13, one of 154 kV external backup line came back. And on March 18, the Tokai Dai-ni switched to the external regular power supply (275 kV

system) and returned to the normal power supply system.

b Seawater pump and emergency power supply

The tsunami flooded the north emergency seawater pump area in the seawater pump room, as shown in Figure III-3-8. Consequently one of three seawater pumps for emergency diesel generators was submerged, and one of three emergency diesel generators stopped. Meanwhile, the other two emergency diesel generators were able to operate, successfully ensuring emergency power supply.

When the earthquake hit the site, the north emergency seawater pump room was under leveling construction of its sidewall as protection against tsunami (H.P. +5.8 m, 4.9 m above sea level). This construction work put in place a new sidewall up to H.P. +7.0 m (6.1 m above sea level) outside the existing sidewall, but the waterproof sealing of the penetration (small holes for electric cables, etc.) of the wall had not been completed, and as a result the seawater came through the small holes into the pump room.

The height of the run-up tsunami was approximately H.P. +6.3 m (5.4 m above sea level), not going beyond the new sidewall, which was as high as H.P. +7.0 m (6.1 m above sea level).

4) Integrity assessment of the reactor building in wake of a main shock

Floor response spectra of the observed seismic ground motion exceeded the design basis seismic ground motion in the application document for establishment permit and the standard seismic ground motion Ss in a certain periodic band. An integrity assessment of the reactor building was conducted, based on the same procedures of the Onagawa as mentioned above 3.(1) 4).

(3) Situation of Higashidori NPS at the time of the earthquake

At the time of the Earthquake, the Higashidori Nuclear Power Station was in in-service inspection, and the reactor was not operated. On the site, no damage caused by seismic ground motion and tsunami was reported. The observed seismic ground motion at the reactor building was 17 Gal. The earthquake caused the external power supply (the Mutsu trunk line and Tohoku-Shiranuka line) to be lost, but an emergency diesel generator was able to operate, successfully ensuring power supply. Later the same day, at 23:59, the Tohoku-Shiranuka line was restored, which enabled the cooling of the spent fuel storage

pool, etc. using the external power supply.

Table III-3-1 Max. acceleration values observed in reactor building at Onagawa NPS.

| Loc. of seismometer | | Record Max. acc. (Gal) | | | Max. response acceleration to the DBGM Ss (Gal) | | |
|---|---|---|---|---|---|---|---|
| | | NS | EW | UD | NS | EW | UD |
| Unit 1 | Roof | 2000 | 1636 | 1389 | 2202 | 2200 | 1388 |
| | Refueling Floor(5F) | 1303 | 998 | 1183 | 1281 | 1443 | 1061 |
| | 1ST F | 573 | 574 | 510 | 660 | 717 | 527 |
| | Base mat | 540 | 587 | 439 | 532 | 529 | 451 |
| Unit 2 | Roof | 1755 | 1617 | 1093 | 3023 | 2634 | 1091 |
| | Ref. Floor(3F) | 1270 | 830 | 743 | 1220 | 1110 | 968 |
| | 1ST F | 605 | 569 | 330 | 724 | 658 | 768 |
| | Base mat | 607 | 461 | 389 | 594 | 572 | 490 |
| Unit 3 | Roof | 1868 | 1578 | 1004 | 2258 | 2342 | 1064 |
| | Ref. Floor(3F) | 956 | 917 | 888 | 1201 | 1200 | 938 |
| | 1ST F | 657 | 692 | 547 | 792 | 872 | 777 |
| | Base mat | 573 | 458 | 321 | 512 | 497 | 476 |

Reference: Tohoku Electric Power Co., Inc
[Online]. http://www.tohoku-epco.co.jp/ICSFiles/afieldfile/2011/04/07/110407_np_b1.pdf
Partially modified by JNES.

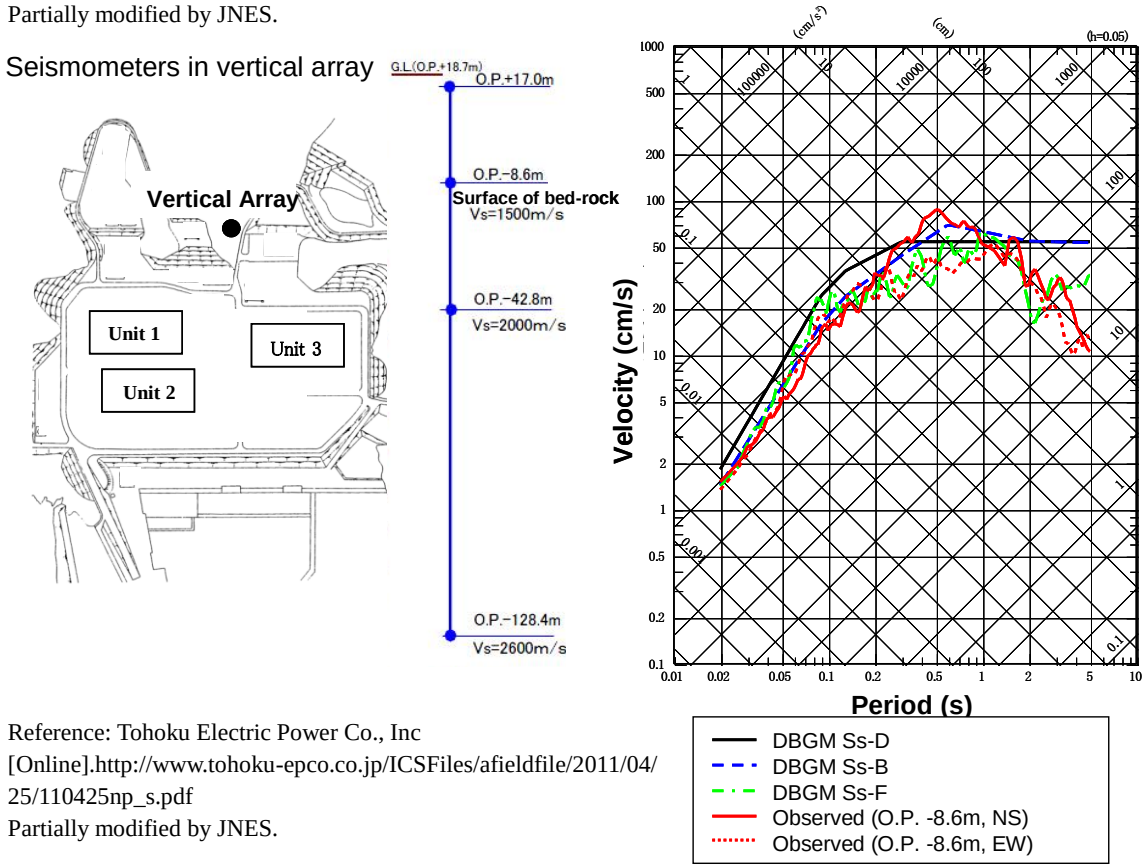


Reference: Tohoku Electric Power Co., Inc
[Online].http://www.tohoku-epco.co.jp/ICSFiles/afieldfile/2011/04/25/110425np_s.pdf
Partially modified by JNES.

Fig. III-3-1 Deployment of seismometers and comparison of observed response spectra with the DBGM Ss on a free surface (equivalent to the base stratum) at Onagawa NPS.

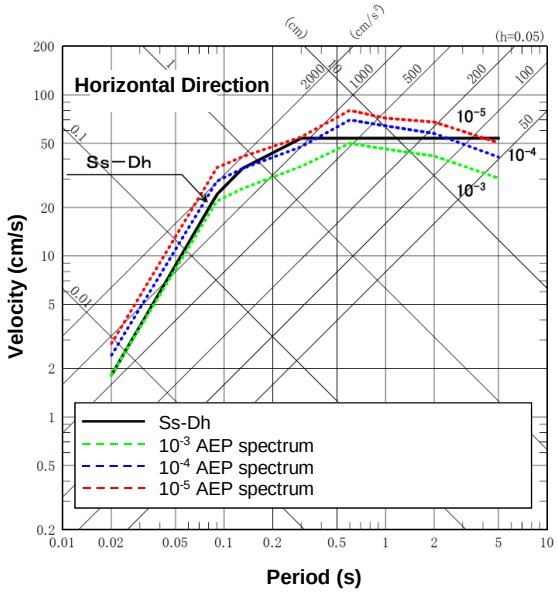


Reference: Tohoku Electric Power Co., Inc
[Online]. http://www.nisa.meti.go.jp/shingikai/107/3/2/017/17-2-1.pdf
Partially modified by JNES.

Fig. III-3-2 Annual exceedance probability (AEP) of DBGM Ss for Onagawa NPS.

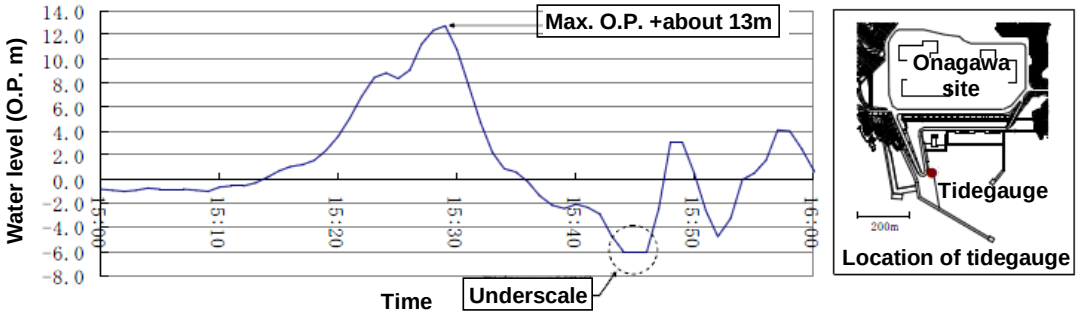


Reference: Tohoku Electric Power Co., Inc
[Online].http://www.tohoku-epco.co.jp/ICSFiles/afieldfile/2011/04/26/110407_np_t3.pdf
Partially modified by JNES.

Fig. III-3-3 Time history of water level changes observed at Onagawa NPS.

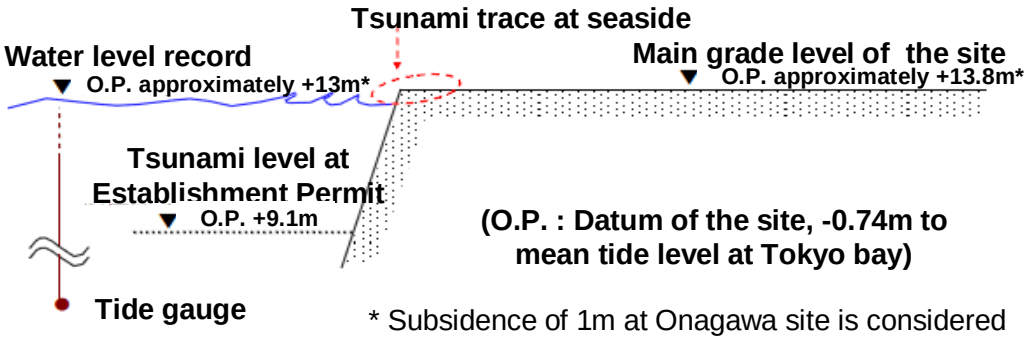


Reference: Tohoku Electric Power Co., Inc
[Online].http://www.tohoku-epco.co.jp/ICSFiles/afieldfile/2011/04/26/110407_np_t3.pdf
Partially modified by JNES.

Fig. III-3-4 Outline of tsunami arrival at Onagawa NPS.

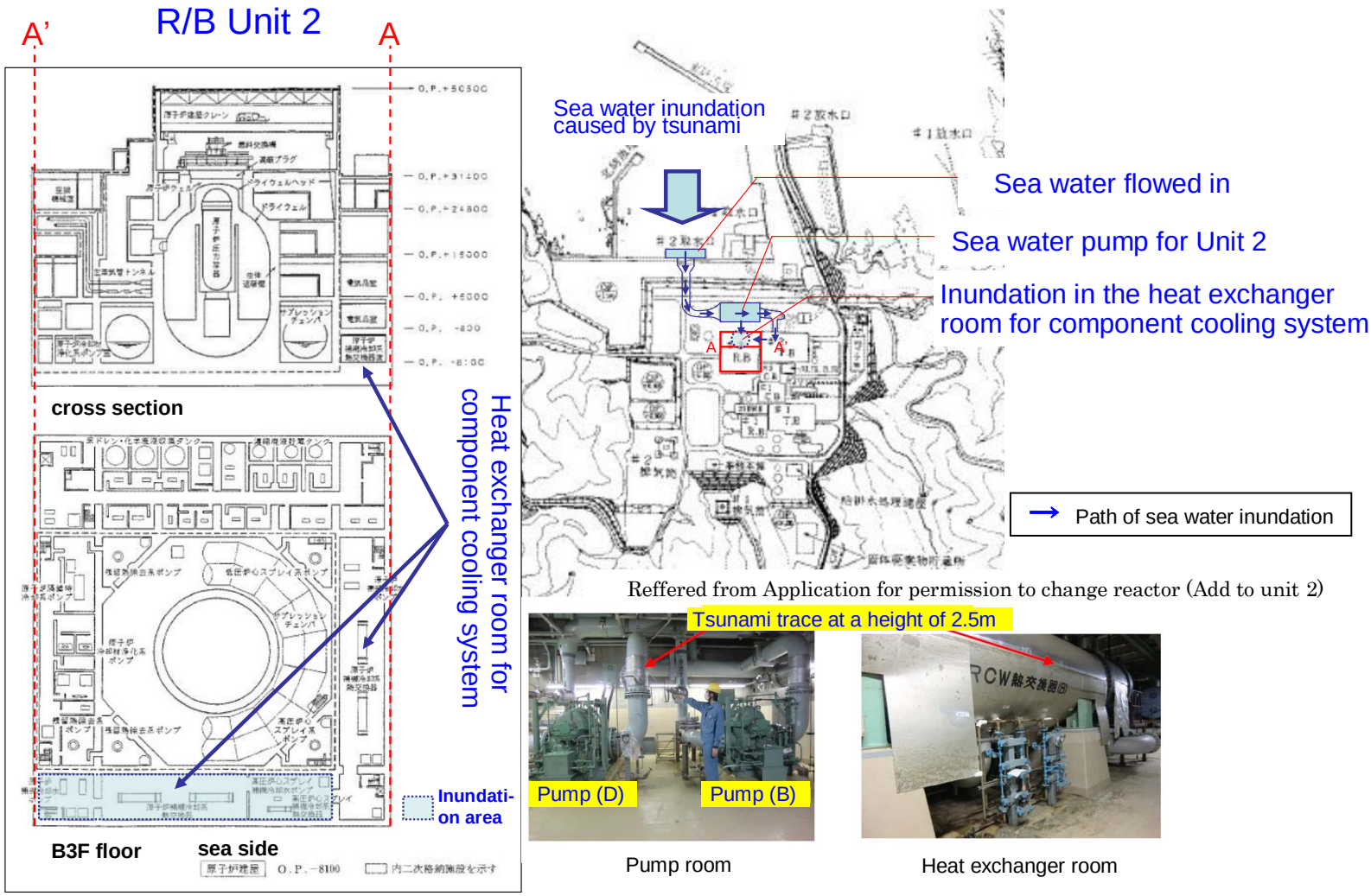


Reffered from Application for permission to change reactor (Add to unit 2)

Reference (Photos): Tohoku Electric Power Co., Inc [Online]. http://www.tohoku-epco.co.jp/ICSFiles/afieldfile/2011/04/26/110426_siryou.pdf
Partially modified by JNES.

Fig. III-3-5(a) Inundation in the heat exchanger room for a component cooling system (1) at Onagawa NPS.

**[ Inundation pathway to Heat exchanger (B) room for component cooling system ]**

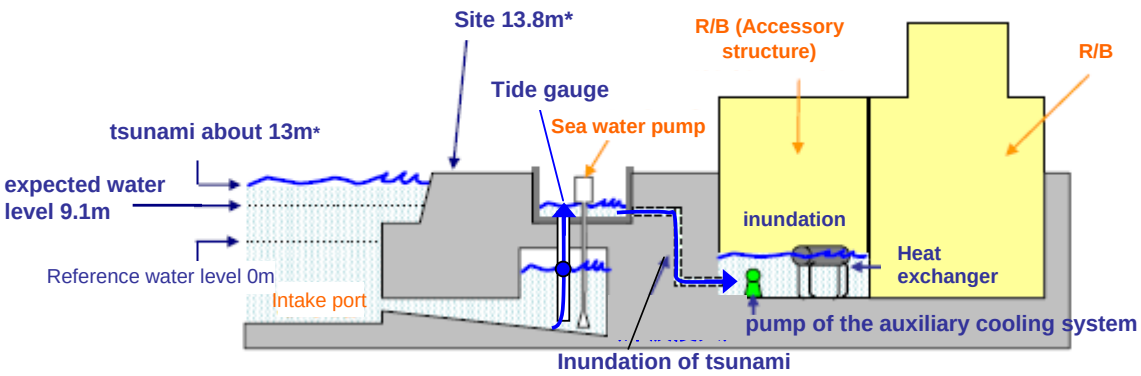


*Subsidence of 1m at Onagawa site is considered

**[ Installation position of tide gauge interlock with Unit 2 Circulation Water Pump trip ]**

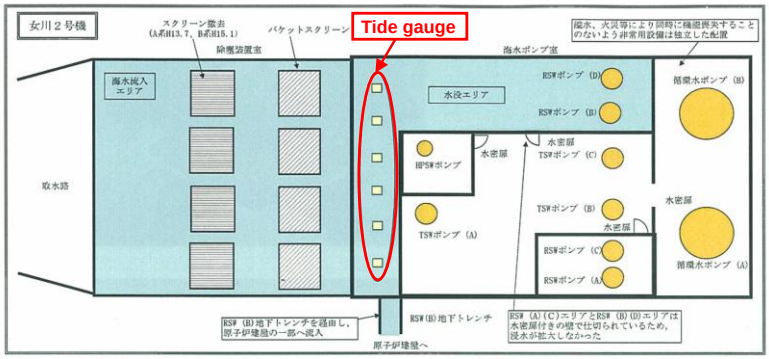


**[ Tsunami countermeasure for tide gauge ]**

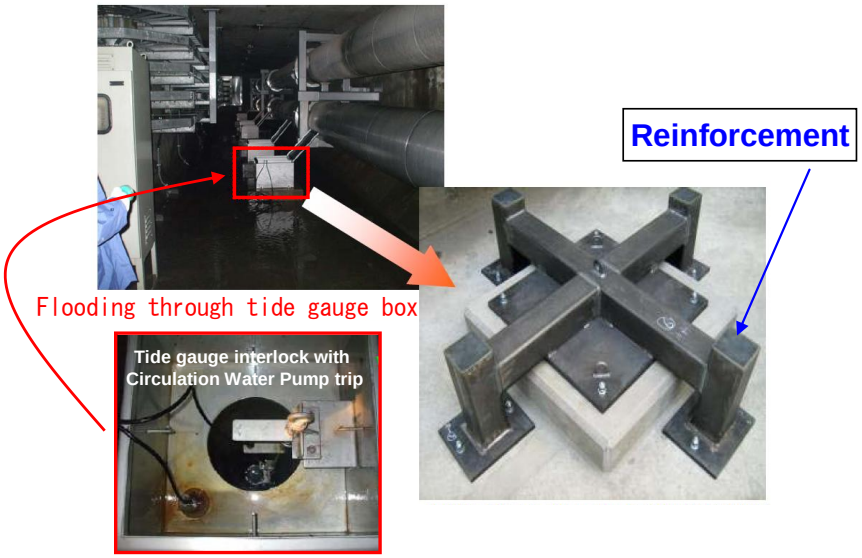


Reference: NISA [Online].
http://www.meti.go.jp/press/2011/05/20110530001/20110530001.pdf
Partially modified by JNES.

Fig. III-3-5(b) Inundation in the heat exchanger room for component cooling system (2) at Onagawa NPS.

Max. shear strain response of shear resisting at R/B

| | | Analytical result | Standard Value* | (Comparison) DBGM |
|---|---|---|---|---|
| Unit 1 | NS | $0.36\times10^{-3}$ | $2.0\times10^{-3}$ | $0.65\times10^{-3}$ |
| | EW | $0.35\times10^{-3}$ | | $0.56\times10^{-3}$ |
| Unit 2 | NS | $0.49\times10^{-3}$ | | $1.15\times10^{-3}$ |
| | EW | $0.28\times10^{-3}$ | | $0.55\times10^{-3}$ |
| Unit 3 | NS | $0.81\times10^{-3}$ | | $0.99\times10^{-3}$ |
| | EW | $0.18\times10^{-3}$ | | $0.41\times10^{-3}$ |

* Standard values are established in JEAC4601-2008 (Japanese seismic design code for nuclear power plants; Japan Electric Association). They are twice the value of ultimate shear strain for reinforced concrete shear walls as safety factor.

Shear force of R/B aseismic resisting at each floor

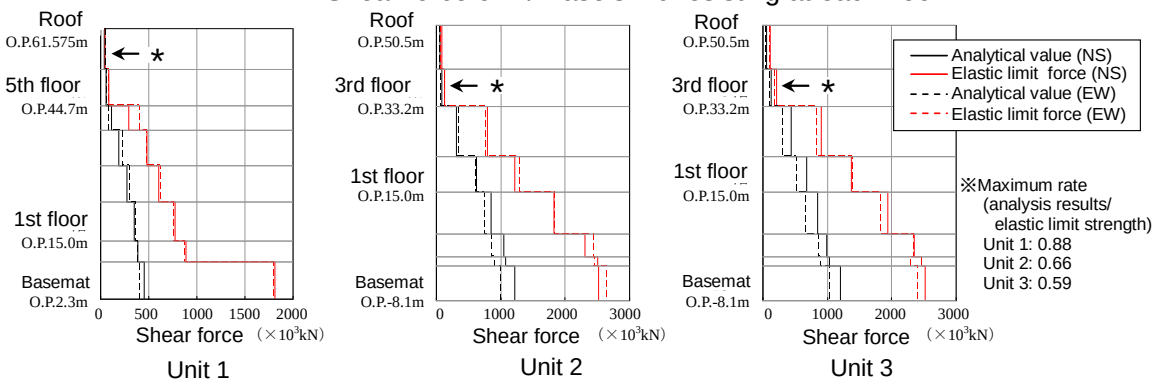


Reference: Tohoku Electric Power Co., Inc
[Online]. http://www.tohoku-epco.co.jp/ICSFiles/afieldfile/2011/04/07/110407_np_t1.pdf
Partially modified by JNES.

Fig. III-3-6 Verification of shear strain and shear force acted on seismic walls at each floor in R/Bs of Onagawa NPS.

Table III-3-2 Maximum accelerations values observed in reactor buildings at Tokai Dai-ni NPS.

| Loc. of seismometer | | Record Max. acc. (Gal) | | | Max. acceleration at construction (Gal) | | Max. response acceleration to the DBGM Ss (Gal) | | |
|---|---|---|---|---|---|---|---|---|---|
| | | NS | EW | UD | NS | EW | NS | EW | UD |
| Reactor building | 6 F | 492 | 481 | 358 | 932 | 951 | 799 | 789 | 575 |
| | 4 F | 301 | 361 | 259 | 612 | 612 | 658 | 672 | 528 |
| | 2 F | 225 | 306 | 212 | 559 | 559 | 544 | 546 | 478 |
| | Base mat (B2F) | 214 | 225 | 189 | 520 | 520 | 393 | 400 | 456 |

Reference: The Japan Atomic Power Company
[Online]. http://www.japc.co.jp/news/bn/h23/230407.pdf
Partially modified by JNES.

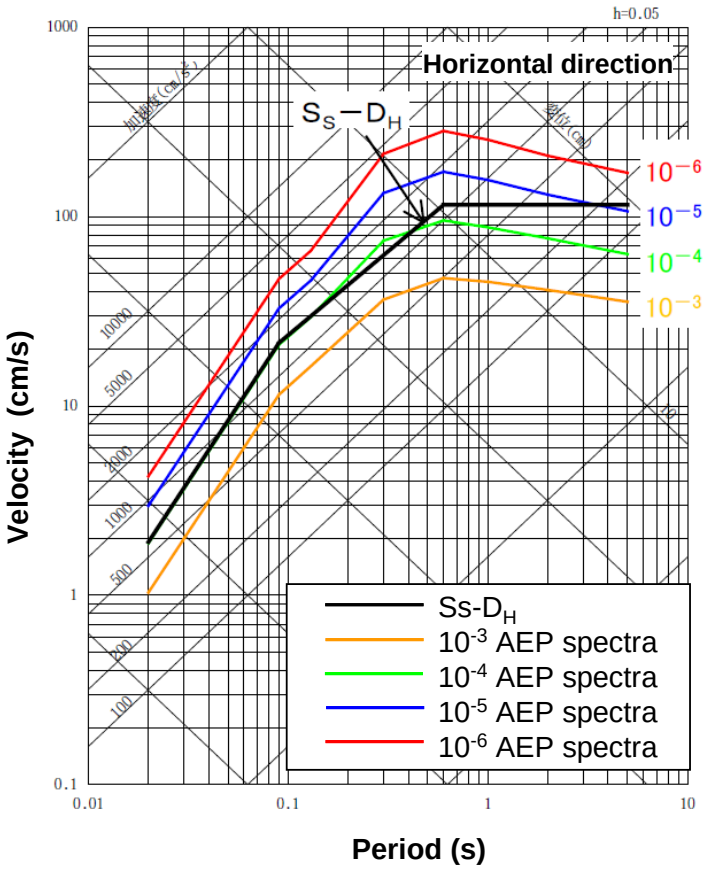


Reference: The Japan Atomic Power Company
[Online]. http://www.nisa.meti.go.jp/shingikai/107/3/1/006/6-2-1-1.pdf
Partially modified by JNES.

Fig. III-3-7 Annual exceedance probability (AEP) of DBGM Ss for Tokai Dai-ni NPS.

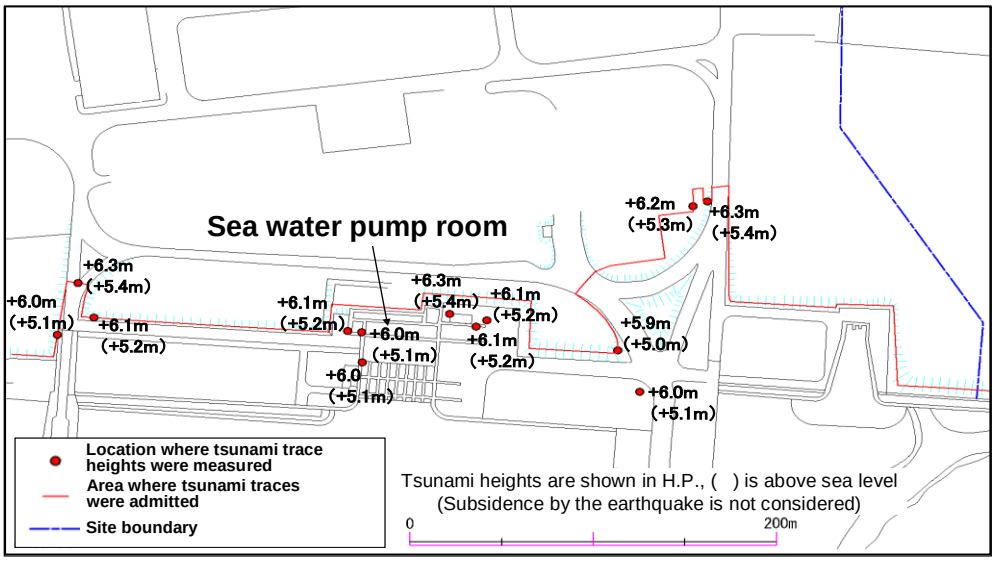


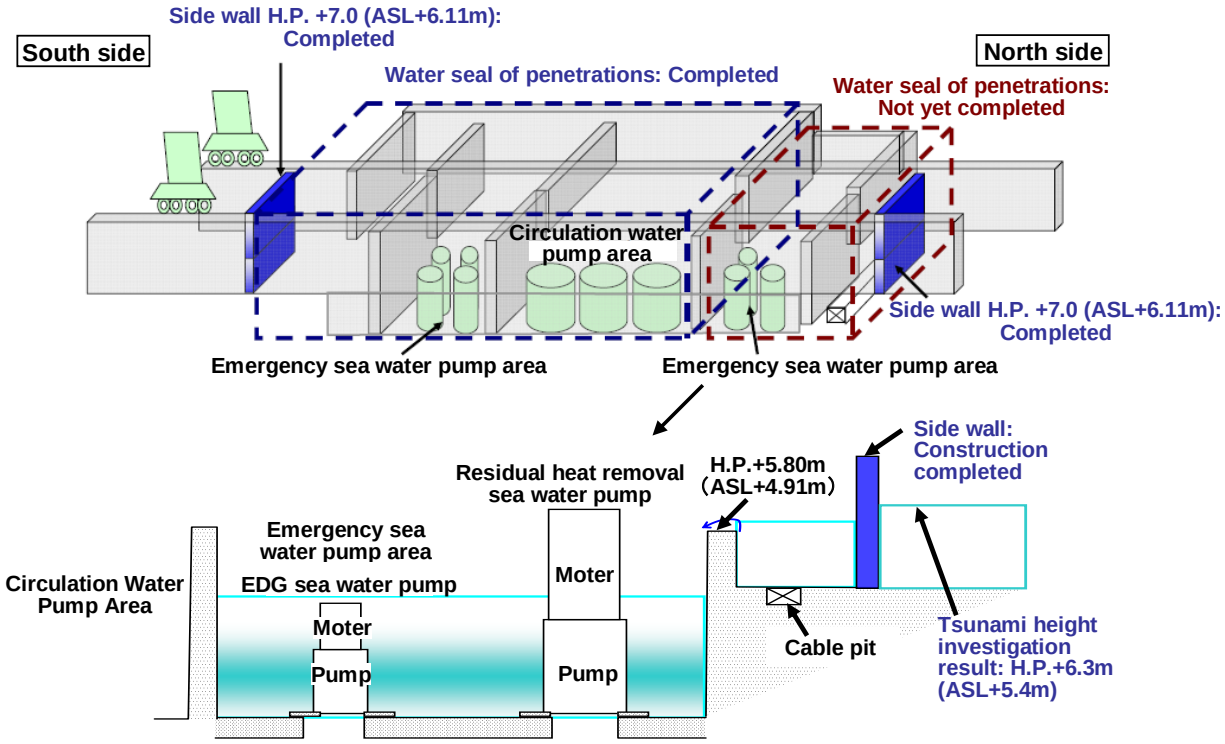


Reference: The Japan Atomic Power Company
[Online]. http://www.japc.co.jp/news/bn/h23/230407.pdf
Partially modified by JNES.

Fig. III-3-8 Map of the areas with tsunami traces identified at Tokai Dai-ni NPS.

4. Assessment of earthquake and tsunami damage

(1) Importance of incorporating combined rupture of multiple seismic source areas

This earthquake was an enormously huge event with a magnitude of 9.0. The focal area extending about 400 km long north-south and about 200 km wide east-west caused multiple ruptures of seismic sources starting in Off-Shore Miyagi Prefecture and propagating to the north, Off-Shore Iwate Prefecture, and to the south, Off-Shore Fukushima Prefecture and Off-Shore Ibaraki Prefecture. On this basis, importance of considering possible combined rupture of multiple seismic source areas was re-recognized regarding the evaluation of seismic ground motion. The same agenda was also recognized important regarding the assessment of the size of associated tsunamis.

(2) Importance of incorporating of exceedance probability for design basis seismic ground motion and design basis tsunami, defense in depth design, and residual risk assessment

Ground motions in this earthquake observed at some NPS exceeded the standard seismic ground motion in certain period ranges. The Regulatory Guide for Reviewing Seismic Design states that occurrence of a seismic ground motion exceeding standard ground motion can not be denied. In this context, the exceedance probability of standard seismic ground motions determined from the current procedure should be examined as to its appropriateness in terms of the safety goal to be achieved.

At Onagawa NPS, it was confirmed that the measures taken to protect the seawater pump system from inundation were appropriate even under uncertainties required for consideration in the Tsunami Assessment Method by the Japan Society of Civil Engineers (2002). At the Tokai Dai-ni NPS preventive actions were taken to protect the seawater pump system from inundation based on recognition of the uncertainties. At Fukushima Dai-ichi NPS, some actions were taken to lift seawater pumps.

In the attack of the tsunami, Onagawa plant and the Tokai Dai-ni plant where inundation was slight and light enough were able to avoided total loss of the terminal heat sinks. At Fukushima Dai-ni Plant, which was more severely inundated, the heat sink of the unit 3 were saved and functioned. In contrast, Fukushima Dai-ichi plant was inundated heavily beyond its all tsunami protection capabilities, and lost all. This has led to recognition of need for comprehensive restructuring the tsunami protection that will ensure defense in depth of NPS.

On this basis, it was recognized essential to take actions according to the context of the Regulatory Guide for Reviewing Seismic Design, including determining design basis tsunami with appropriately large return period based on probabilistic tsunami hazard assessment, apply it to actual tsunami protection design, taking actions to cope with beyond-design tsunami, and validating the total system through the risk assessment in the light of defense in depth to realize required safety goal.

(3) Significance of diversity

Based on the damage caused by this tsunami, it can be seen that, of safety systems of redundant configuration, those safety systems having diversity contributed much, remaining operational, to defense against the tsunami hitting. Therefore, the significance of seeking diversity in constructing safety systems of redundant configuration has been seriously re-realized.

(4) Significance of measures against tsunami scouring and wave force

This tsunami caused the ground foundation of general harbor installations to be scoured by the tsunami run-up and backrush, resulting in collapse. The main units of harbor installations were also knocked down by the strong wave force. This has led to the recognition of significance of taking into consideration the severity of destructive power of wave force and scouring in designing NPSs, for the purpose of defending them against design basis tsunami by drawing on coastal structures. Furthermore, it has also been seriously recognized that, in order to prevent NPSs from being inundated and submerged by a tsunami above the design basis tsunami, the severity of destructive power of the run-up tsunami should be fully considered.

(5) Enhanced measures for seismic and tide level observation systems

Following the recent earthquake, the records of acceleration time history at some NPSs were not fully secured, being cut off after approximately for 130 to 150 seconds. Functional failures in NPS seismic observation systems were also found in the Chuetsu-Oki Earthquake, and therefore, an in-depth study should have been done into maintaining the functions of the systems.

For the tide level observation systems, the measure ranges of tide level are not enough, and

also, an in-depth study should have been done into maintaining the functions of the systems.

IV. Occurrence and Progress of Accidents in Fukushima Nuclear Power Stations and Other Facilities

1. Outline of Fukushima Nuclear Power Stations

(1) Fukushima Daiichi Nuclear Power Station

Fukushima Daiichi Nuclear Power Station (hereinafter referred to as NPS) is located in Okuma Town and Futaba Town, Futaba County, Fukushima Prefecture, facing the Pacific Ocean on the east side. The site has a half oval shape with the long axis along the coastline and the site area is approx. 3.5 million square meters. This is the first nuclear power station constructed and operated by the Tokyo Electric Power Company, Incorporated (hereinafter referred to as TEPCO). Since the commissioning of Unit 1 in March 1971, additional reactors have been constructed in sequence and there are six reactors now. The total power generating capacity of the facilities is 4.696 million kilowatts.

Table IV-1-1 Power Generating Facilities of Fukushima Daiichi NPS

| | Unit 1 | Unit 2 | Unit 3 | Unit 4 | Unit 5 | Unit 6 |
|---|---|---|---|---|---|---|
| Electric output (10,000 kW) | 46.0 | 78.4 | 78.4 | 78.4 | 78.4 | 110.0 |
| Start of construction | Sep. 1967 | May 1969 | Oct. 1970 | Sep. 1972 | Dec. 1971 | May 1973 |
| Commissioning | Mar. 1971 | Jul. 1974 | Mar. 1976 | Oct. 1978 | Apr. 1978 | Oct. 1979 |
| Reactor type | BWR-3 | BWR-4 | | | | BWR-5 |
| Containment type | Mark I | | | | | Mark II |
| Number of fuel assemblies | 400 | 548 | 548 | 548 | 548 | 764 |
| Number of control rods | 97 | 137 | 137 | 137 | 137 | 185 |

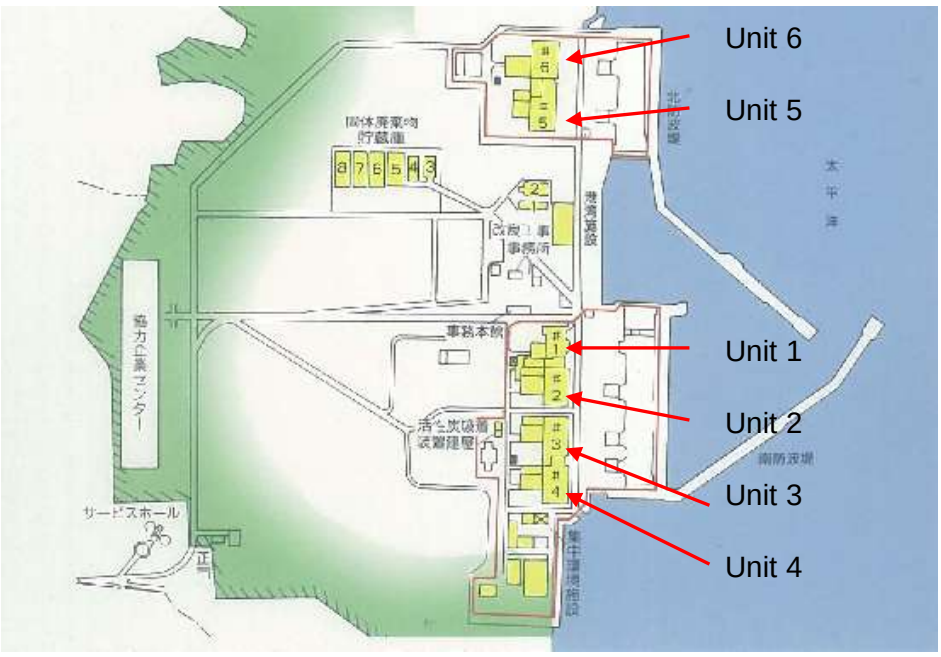


Figure IV-1-1 General Layout of Fukushima Daiichi NPS

(2) Fukushima Daini NPS

Fukushima Daini NPS is located in Tomioka Town and Naraha Town, Futaba County, Fukushima Prefecture, approx. 12 km south of Fukushima Daiichi NPS, and faces the Pacific Ocean on the east side. The site has a nearly square shape and the site area is approx. 1.47 million square meters. Since the commissioning of Unit 1 in April 1982, additional reactors have been constructed in sequence and there are four reactors now. The total power generating capacity of the facilities is 4.4 million kilowatts.

Table IV-1-2 Power Generating Facilities of Fukushima Daini NPS

| | Unit 1 | Unit 2 | Unit 3 | Unit 4 |
|---|---|---|---|---|
| Electric output (10,000 kW) | 110.0 | 110.0 | 110.0 | 110.0 |
| Start of Construction | Nov. 1975 | Feb. 1979 | Dec. 1980 | Dec. 1980 |
| Commissioning | Apr. 1982 | Feb. 1984 | Jun. 1985 | Aug. 1987 |
| Reactor type | BWR-5 | | | |
| Containment type | Mark II | Improved Mark II | | |
| Number of fuel assemblies | 764 | 764 | 764 | 764 |
| Number of control rods | 185 | 185 | 185 | 185 |

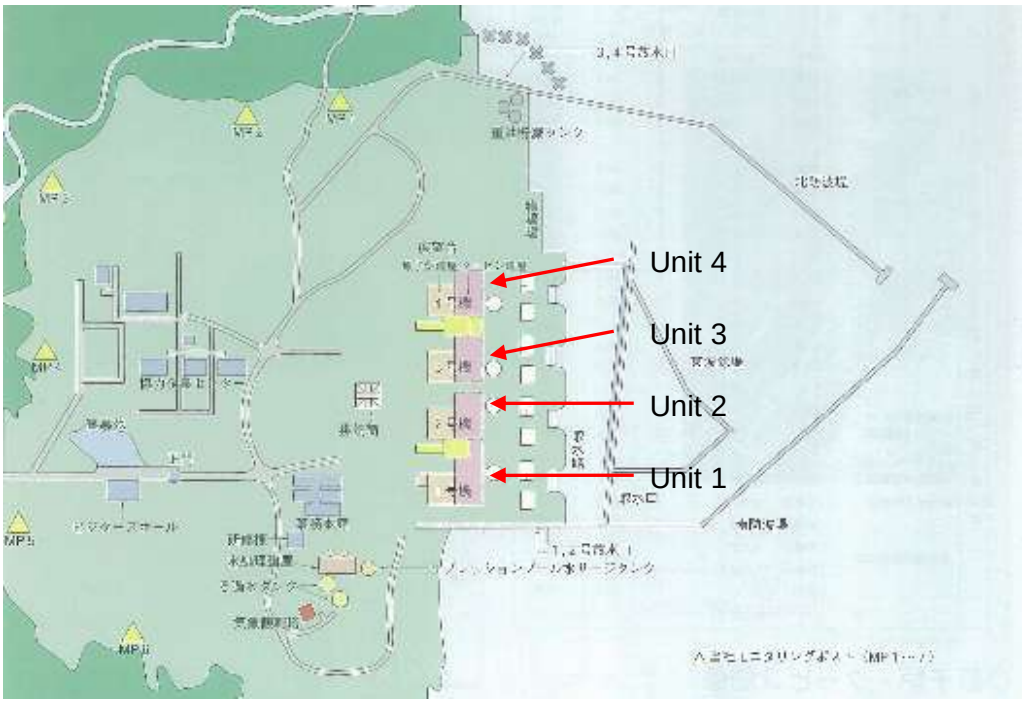


Figure IV-1-2 General Layout of Fukushima Daini NPS

## 2. Safety Assurance and Other Situations in Fukushima NPSs

### (1) Design requirements of nuclear power stations

As described in Chapter II, nuclear power stations must satisfy legal requirements specified in the Reactor Regulation Act, the Electricity Business Act and other relevant laws and regulations.

When receiving an application for installing a nuclear power station from an applicant, Nuclear and Industrial Safety Agency (hereinafter referred to as NISA) conducts the primary safety review, should consult the Nuclear Safety Commission (hereinafter referred to as the NSC Japan) and shall receive their opinion based on the result of their secondary safety review. After NISA considers the opinions of the NSC Japan and examines the results of the safety reviews, the Minister of Economy, Trade and Industry gives the applicant permission to install individually for each reactor. In these safety reviews, NISA and the NSC Japan check that the basic design or the basic design policy of the nuclear power station conforms to the permission criteria specified in the Reactor Regulation Act, for example, in Article 24, “The location, structure, and equipment of the nuclear reactor facility shall not impair prevention of disasters caused by the nuclear reactor, its nuclear fuel material, or objects contaminated with the nuclear fuel material.” The NISA Japan conducts safety reviews based on the most recent knowledge and by referring to regulatory guides established by the NSC Japan as specific judgment criteria.

Regulatory guides are roughly divided into four types: siting, design, safety evaluation, and dose target values. One of the regulatory guides for design, the “Regulatory Guide for Reviewing Safety Design of Light Water Nuclear Power Reactor Facilities,”[IV2-1] (hereinafter referred to as Regulatory Guide for Reviewing Safety Design) specifies the basic design requirements for nuclear power stations. It contains a provision about design considerations against natural phenomena, which specifies that structures, systems, and components (SSCs) with safety functions shall be designed to sufficiently withstand appropriate design seismic forces and shall be designed such that the safety of the nuclear reactor facilities will not be impaired by postulated natural phenomena other than earthquakes, such as floods and tsunami.

It also specifies requirements for safety design against external human induced events, such as collapse of a dam, and fires and others.

Basic Judgment criteria for validation of design policies against earthquakes and tsunami are specified in the "Regulatory Guide for Reviewing Seismic Design of Nuclear Power Reactor Facilities"[IV2-2] (the latest version established by the NSC Japan in September 2006, hereinafter referred as Regulatory Guide for Reviewing Seismic Design), which supplements the Regulatory Guide for Reviewing Safety Design.

The Regulatory Guide specifies the basic policy, "Those Facilities designated as important from a seismic design standpoint shall be designed to bear even those seismic forces exerted as a result of the earthquake ground motion, which could be appropriately postulated as having only a very low possibility of occurring within the service period of the Facilities and could have serious affects to the Facilities from seismological and earthquake engineering standpoints, considering the geological features, geological structures, seismicity, etc. in the vicinity of the proposed site, and such Facilities shall be designed to maintain their safety functions in the event of said seismic forces." It also specifies that uncertainties (dispersion) in formulating the Design Basis Ground Motion Ss shall be considered by appropriate methods and that the probabilities of exceedence should be referred to.

The Regulatory Guide also contains consideration of tsunami as accompanying events of earthquakes, "Safety functions of the Facilities shall not be significantly impaired by tsunami of such magnitude that they could only be reasonably postulated to have a very low probability of occurring and hitting the Facilities within the service period of the Facilities." A commentary in this Regulatory Guide describes that at the design of the Facilities, appropriate attention should be paid, to possibility of occurrence of the exceeding ground motion to the determined one and, recognizing the existence of this "residual risk", every effort should be made to minimize it as low as practically possible.
The NSC Japan requests that government agencies ask licensees to conduct backchecks of seismic safety based on specifications in this Regulatory Guide, along with quantitative assessment of "residual risks" by positively introducing the probabilistic safety assessment (hereinafter referred to as PSA), and review the results. In response to this request, NISA issued "Implementation of seismic safety assessment on existing nuclear power reactor facilities and other facilities to reflect the revisions of the 'Regulatory Guide for Reviewing Seismic Design of Nuclear Power Reactor Facilities' and other safety assessment regulatory guides"[IV2-3] and requested licensees to carry out backchecks of seismic safety and assess "residual risks".

(2) Design basis events to be considered in safety assessment

1) Defining design basis events in safety assessment

As described in Chapter II, the Regulatory Guide for Evaluating Safety Assessment of Light Water Reactor Facilities identifies events to be considered in the safety design and assessment of nuclear facilities and defines them as design basis events.

Design basis events regarding loss of external power supply, total AC power loss, and systems for transporting heat to the ultimate heat sink (hereinafter referred to as the ultimate heat sink), which occurred as part of this accident, are described below.

The Regulatory Guide for Evaluating Safety Assessment of Light Water Reactor Facilities takes loss of external power supply as an abnormal transient during operation and requires check of appropriateness of relevant safety equipment. On the contrary, the Regulatory Guide for Reviewing Safety Design does not take total AC power loss as a design basis event. This is because it requires emergency power supply systems to be designed with a high degree of reliability as AC power supplies. Specifically, the "Regulatory Guide for Reviewing Classification of Importance of Safety Functions for Light Water Nuclear Power Reactor Facilities"[IV2-4] (established by the NSC Japan in August 1990, hereinafter referred as Regulatory Guide for Reviewing Classification of Importance of Safety Functions) classifies emergency power supply systems as systems with safety functions of especially high importance. The Regulatory Guide for Reviewing Safety Design specifies in its guidelines, such as Guideline 9 (Design Considerations for Reliability) and Guideline 48 (Electrical Systems), that systems with safety functions of especially high importance shall be designed with redundancy or diversity and independence and shall be designed such that adequately high reliability will be ensured. As described above, the Regulatory Guide for Reviewing Seismic Design specifies that safety functions shall be maintained in the event of an earthquake. Based on this prerequisite, the Regulatory Guide for Reviewing Safety Design specifies that the nuclear reactor facilities shall be designed such that safe shutdown and proper cooling of the reactor after shutting down can be ensured in case of a short-term total AC power loss, in Guideline 27 (Design Considerations against Loss of Power). However, the commentary for Guideline 27 states that no particular considerations are necessary against a long-term total AC power loss because the repair of interrupted power transmission lines or an emergency AC power system can be depended upon in such a case, and that the assumption of a total AC power loss is not necessary if the emergency AC power system

is reliable enough by means of system arrangement or management. Accordingly, licensees are to install two independent emergency diesel generator systems (hereinafter referred to as emergency DG), which are designed such that one emergency DG is activated if the other emergency DG is failed, and that the reactor is shut down if a failure persists for a long time.

Loss of all seawater cooling system functions is not taken as a design basis event. This is because the Regulatory Guide for Reviewing Classification of Importance of Safety Functions classifies seawater pumps as systems with safety functions of especially high importance, just like emergency power supply systems. The Regulatory Guide for Reviewing Safety Design specifies that systems with safety functions of especially high importance shall be designed with redundancy or diversity and independence, in Guideline 9 (Design Considerations for Reliability), Guideline 26 (Systems for Transporting Heat to Ultimate Heat Sink) and other guidelines. Also, the Regulatory Guide for Reviewing Seismic Design specifies that safety functions shall be maintained in the event of an earthquake.

The generation of flammable gas inside the primary containment vessel (hereinafter referred to as PCV) when reactor coolant is lost is postulated in the design basis events as a cause of hydrogen explosion accidents. To prevent this event, a flammability control system (hereinafter referred to as FCS) that suppresses hydrogen combustion inside the PCV is installed in compliance with Guideline 33 of the Regulatory Guide for Reviewing Safety (the system controlling the atmosphere in the reactor containment facility). Additionally, keeping the atmosphere inside the PCV inert further reduces the possibility of hydrogen combustion. These designs are aimed at preventing hydrogen combustion in the PCV from the viewpoint of PCV integrity, and are not aimed at preventing hydrogen combustion inside the reactor building.

2) Safety design for the design standard events at Fukushima NPSs

The safety designs for the design basis events of offsite power supplies, emergency power supply systems, and reactor cooling functions related to the accidents at Fukushima NPSs are the following:

The power sources are connected to offsite power supply grids via two or more power lines. Multiple emergency diesel generators are installed independently with redundant

design as the emergency power supplies for a loss of external power supply. Also, to cope with a short-period loss of all AC power sources, emergency DC power sources (batteries) are installed maintaining redundancy and independence.

Unit 1 of Fukushima Daiichi NPS is equipped with isolation condensers[1] (hereinafter referred to as IC) and a high pressure core injection system (hereinafter referred to as HPCI), and Unit 2 and Unit 3 of Fukushima Daiichi NPS are equipped with HPCI and a reactor core isolation cooling system[2] (hereinafter referred to as RCIC) to cool the reactors when they are under high pressure and the condenser does not work. Unit 1 of Fukushima Daiichi NPS is equipped with a core spray system (hereinafter referred to as CS) and a reactor shut-down cooling system (hereinafter referred to as SHC), and Unit 2 and Unit 3 of Fukushima Daiichi NPS are equipped with a residual heat removal system (hereinafter referred to as RHR) and a low pressure CS to cool the reactors when they are under low pressure.

Additionally, in the main steam line that leads to the reactor pressure vessel (hereinafter referred to as RPV) are installed main steam safety relief valves (hereinafter referred to as SRV) that discharge steam in the reactor to the suppression chamber (hereinafter referred to as S/C) and safety valves that discharge steam in the reactor to the dry well (hereinafter referred to as D/W) of the PCV. The SRV functions as an automatic decompression system. Table IV-2-1 shows a comparison between these safety systems. Their system structures are shown in Figures IV-2-1 to IV-2-7.

As shown in Figure IV-2-8 and Figure IV-2-9, the heat exchanger in the SHC for Unit 1 or RHR for Units 2 and 3 of Fukushima Daiichi NPS transfers heat using seawater supplied by the seawater cooling system to the sea, as the ultimate heat sink.

To prevent hydrogen explosion in the PCV, it is filled with nitrogen gas and a flammability control system FCS is installed.

---

1 This facility condenses steam in the RPV and returns the condensed water to the RPV by natural circulation (driving pumps not needed), when the RPV is isolated due to loss of external power supplies, for example, (when the main condenser cannot work to cool the reactor). The IC cools steam that is led to a heat transfer tube with water stored in the condenser (in the shell side).

2 This system cools the reactor core when the RPV is isolated from the condensate system due to loss of external power supplies, for example. It can use water either in the condensate storage tank or in the suppression chamber. The turbine that uses part of the reactor steam drives the pump of this system.

(3) Measures against severe accidents

1) Basis of measures against severe accidents

a. Consideration of measures against severe accidents

Severe accidents [3] has drawn attention since "The Reactor Safety Study" (WASH-1400)[IV2-5], which assessed the safety of nuclear power stations by a probabilistic method, was published in the United States in 1975.

Severe accidents, which are beyond design basis events on which nuclear facilities are designed, are considered to be at defense depth level 4 in multiple protection as described in IAEA's Basic Safety Principles for Nuclear Power Plants, 75-INSAG-3, Rev.1, INSAG-12 (1999)[IV2-6]. Multiple protection generally refers to a system that comprises multi-layered safety measures through ensuring design margin at each level of defense, and these levels include: preventing occurrence of abnormalities (level 1); preventing progression of abnormalities into accidents (level 2); and mitigating impact of accidents (level 3). The design basis events are usually for setting safety measures up to level 3. Measures against severe accidents belong to actions at level 4, and they provide additional means to prevent events from progression into severe accidents and mitigate impacts of severe accidents, and also provide measures effectively using existing facilities or based on procedures. They are stipulated as actions to control severe accidents or actions to protect the function of confining radioactive materials to prevent events from worsening.

In Japan, following the 1986 Chernobyl accident in the former Soviet Union, the NSC in Japan set up the Round-table Conference for Common Problems under its Special Committee on Safety Standards of Reactors in July 1987 to study measures against severe accidents. The Round-table Conference members did research on the definition of severe accidents, PSA methods, and maintaining the functions of the PCV after a severe accident, and they put together the "Report on Study of Accident Management as a Measure against Severe Accidents—Focused on the PCV"[IV2-7] in March 1992.

[3] These events significantly exceed design basis events causing the system to become incapable of appropriately cooling the reactor core or controlling reactivity by any methods covered by the safety design, and consequently will lead to serious reactor core damage.

This report says, “Nuclear facility safety is secured through safety ensuring activities that deal with design basis events, and the risk of radioactive exposure of the general public in the vicinity is sufficiently low. Even if a severe accident or events that may lead to a severe accident occurred at a nuclear facility, appropriate accident management[4] based on the PSA would reduce the possibility of it becoming a severe accident or mitigate the impact of a severe accident on the general public, further lowering the risk of exposure.”

Following this report, the NSC Japan made a decision called “Accident Management as a Measure against Severe Accidents at Power Generating Light Water Reactors”[IV2-8] (herein after called the “Accident Management Guidelines”) in May 1992. Based on this decision, licensees have taken voluntary actions (not included in regulatory requirements), such as measures to prevent accidents from becoming severe accidents (phase I) and measures to mitigate the impact of severe accidents (phase II).

The (former) Ministry of International Trade and Industry, based on these Accident Management Guidelines, issued the “Implementation of Accident Management”[IV2-9] to request licensees to carry out PSA on each of their light water nuclear power reactor facilities, introduce accident management measures based on PSA, and submit result reports on these actions, the content of which MITI was to confirm.

After that, the Basic Safety Policy Subcommittee of the Nuclear and Industrial Safety Subcommittee studied overall safety regulations in Japan, and it put together a report “Issues on Nuclear Safety Regulations”[IV2-10] in 2010. This report says that based on moves overseas such as introducing severe accident measures as a regulatory requirement in some countries, it is appropriate to consider dealing with safety regulations on severe accidents measures in terms of their position in the regulation system and legislation. In response to this, NISA has been considering how to deal with severe accidents.

b. Utilization of risk information

[4] Appropriate severe management is measures taken to make effective use of not only safety margin allowed in the current design and original functions provided in safety design but also other functions expected to work for safety as well as newly installed components and equipment so that any situation which exceeds design basis events and may cause serious damage to core will not progress to a severe accident, and, even if the situation progresses to a severe accident, its influences will be mitigated.

The NSC Japan started a study of periodic safety reviews[5] (hereinafter referred to as PSR) in order to consider using PSA, and it worked out a basic policy on PSR including implementation of PSA in 1993.

This policy requested implementation of PSA as part of PSR activities to effectively improve the current level of safety even further, because PSA comprehensively and quantitatively assesses and helps get the whole picture of the safety of a nuclear power station by postulating a wide range of abnormal events that may occur at a nuclear power station. As a result, the (former) MITI has requested that licensees implement PSR since 1994, and has reported to the NSC Japan on licensees' assessment results including PSA.

Later in 2003, PSR was included in regulatory requirements as part of the measures for aging management, while PSA was left as voluntary measures taken by licensees. Then it was decided that PSR results would be confirmed by NISA and reports to the NSC Japan were discontinued. Meanwhile, licensees have been taking severe accidents measures using PSA.

In Japan, civil standards on PSA related to internal events are established. For external events, a civil standard on seismic PSA is also established, while study of PSA related to other external events such as flooding has only started.

The Study Group on Use of Risk Information of Nuclear and Industrial Safety Subcommittee studied utilization of risk information to put together "the basic policy of utilization of risk information in nuclear regulation"[IV2-11] in 2005. However, later the activity had been temporarily suspended. In 2010, this study group was resumed, and it has been considering measures for further utilization of risk information.

On the other hand, the safety goals associated with the use of risk information have been being examined by the Special Committee on Safety Goals of the NSC Japan since 2000, and the "Interim Report on Investigation and Examination"[IV2-12] was issued in 2003. In addition, the "Performance Goals of Commercial Light Water

[5] It conducts comprehensive re-evaluation of the safety of nuclear power stations approximately once every ten years based on the latest technological knowledge in order to improve the safety of existing nuclear power plants. Specifically, it re-evaluates comprehensive evaluation of operating experience, reflection of the latest technological knowledge, conduction of technical evaluations for aging, and PSA results.

Reactor Facilities: Performance Goals Corresponding to Safety Goal Proposal"[IV2-13] was issued in 2006. However, the use of risk information based on the safety goals has not progressed because the safety goals of Japan have not been determined.

Accordingly, compared to other countries, Japan has not been sufficiently promoting the use of risk information.

c. Examination of total AC power loss and cooling functions, etc.

The following are the status of the severe accidents associated with the current accident.

According to the “Interim Report on the Conference on Common Issues”[IV2-14] issued by the NSC Japan ((the Special Committee on Nuclear Safety Standards of on February 27, 1989, hereinafter referred to as the "Common Issue Interim Report"), accident management during total AC power loss includes efforts such as core cooling by using RCIC powered by direct current (from batteries), recovery of offsite power systems or emergency DGs, bringing in portable diesel generators or batteries, and power interchange between emergency DGs in adjacent plants. The Common Issue Interim Report states that an accident has a high chance of being settled before it results in core damage if preparation has been made for such management.

In addition, if RHR lose its functionality, the inner pressure and temperature of the PCV increase with decrease in the pressure of the reactor. Accordingly, the Common Issue Interim Report additionally states that to prevent the PCV from being damaged, facilities for depressurization of the PCV to vent pressure in order to prevent PCV rupture (hereinafter referred to as “PCV vent”) should be built and that the procedures for the operation of the individual facilities should be prepared.

The accident management guidelines mention alternative coolant injection into the reactor by using a fire extinguishing line and the PCV vent as the Phase I (core damage prevention) accident management of BWR plants. The accident management guidelines also state that PCV vent facilities with a filtering function installed in combination with other measures, such as coolant injection into the PCV, may be an effective measure for Phase II (after core damage) accident management. The accident

management guidelines additionally state that coolant injection into the PCV should be included in the Phase I (core damage prevention) and Phase II (after core damage) accident management of BWR plants. In the PSA that is the basis of this guideline, it was concluded that injecting an alternative coolant into the PCV would suppress increases in the temperature and pressure of the atmosphere in the PCV and prevent debris-concrete reaction[7] and melt shell attack[8].

2) Status of preparation for accident management by TEPCO

TEPCO issued the "Report on Accident Management Examination" [IV2-15] in March 1994, and has been preparing for accident management and establishing procedures, education, etc. associated with the application of the accident management based on the report. TEPCO presented the "Report on Preparation for Accident Management"[IV2-16] describing the status of the preparation for accident management to the Ministry of Economy, Trade and Industry in May 2002.

TEPCO has prepared accident management for the reactor shutdown function, coolant injection into reactors and PCVs function, heat removal from PCVs function, and support function for safety functions. The main measures of accident management are shown in Table IV-2-2. In addition, the system structures of accident management facilities of Units 1 to 3 are shown in Figs. IV-2-10 to IV-2-17.

With regard to alternative coolant injection in the Fukushima NPSs, TEPCO has built the following lines for injecting coolant into reactors: lines via condensate water makeup systems from the condensate storage tanks as the water sources; and lines via fire extinguishing systems and condensate water makeup systems from the filtrate tanks as the water sources. TEPCO has also developed "procedures for coolant injection using these lines during accidents (severe accidents)" (hereinafter referred to as "procedures for operation in severe accidents").

In addition, TEPCO has built a switching facility in Unit 3 for injecting seawater into the reactor via the residual heat removal sea water system (hereinafter referred to as RHRS)

---

7 When core melt drops down through the bottom of RPV, it causes thermal decomposition of floor concrete as well as erosion with concrete constituents.

8 When core melt drops down through the bottom of RPV, it drops into and spreads over the cavity area at the bottom of RPV. Then debris spreads over the dry well floor through a pedestal opening and causes damage to walls of PCV.

as shown in Fig. IV-2-12 and has developed a procedure for switching operation of the relevant facilities. However, Units 1 and 2 are not provided with the such facility because no seawater lines lead into the reactor buildings of Units 1 and 2.

TEPCO built new vent pipes extending from the S/C and D/W to the stacks from 1999 to 2001 as PCV vent facilities during severe accidents as shown in Figs. IV-2-13 and IV-2-14. These facilities were installed to bypass the standby gas treatment system (hereinafter referred to as SGTS) so that they can vent the PCV when the pressure is high. The facilities are also provided with a rupture disk in order to prevent malfunction.

The procedures for operation in severe accidents define the PCV vent conditions and the PCV vent operation during severe accidents as follows: PCV vent from the S/C (hereinafter referred to as “wet vent”) shall be given priority operation; and when the PCV pressure reaches the maximum operating pressure before core damage, when the pressure is expected to reach about twice as high as the maximum operating pressure after core damage and if RHR is not expected to be recovered, wet vent shall be conducted if the total coolant injection from the external water source is equal to or less than the submergence level of the vent line in the S/C or PCV vent from the D/W (hereinafter referred to as “dry vent”) shall be conducted if the vent line of the S/C is submerged. The procedures for operation in severe accidents specify that the chief of emergency response headquarters shall determine whether PCV vent operation should be conducted after core damage.

For accident management associated with the function of heat removal from the PCV, alternative coolant injection to a PCV spray (D/W and S/C) (hereinafter referred to as the alternative spray function) has also been provided as shown in Figs. IV-2-15 and IV-2-16. PCV sprays (D/W and S/C) are installed to reduce the pressure and temperature generated due to energy released within the PCV if reactor coolant is lost, according to guideline 32 (containment heat removal system) of the Regulatory Guide for Reviewing Safety Design. The procedures for operation in severe accidents specify criteria such as the standard for starting and terminating coolant injection from RHR by using this modified line and the criteria for starting and terminating coolant injection from the condensate water makeup system and the fire extinguishing system.

Power interchange facilities have been installed such that the power supply of the alternating current source for power machinery (6.9 kV) and the low voltage alternating

current source (480 V) can be interchanged between adjacent reactor facilities (between Units 1 and 2, between Units 3 and 4, and between Units 5 and 6) as shown in Fig IV-2-17. The procedures for operation in severe accidents specify procedures for the relevant facilities.

In order to recover emergency DGs, the procedures for operation in severe accidents specify procedures for recognition of failures, detection of the location of failures, and recovery work for faulty devices by maintenance workers.

Table IV-2-1 Comparison between Engineering Safety Equipment and Reactor Auxiliary Equipment

| Fukushima-Daiichi Nuclear Power Station | | Unit 1 | Unit 2 | Unit 3 |
|---|---|---|---|---|
| Core spray system (CS) | No. of systems | 2 | 2 | 2 |
| | Flow (T/hr per system) | 550 | 1020 | 1141 |
| | No. of pumps (per system) | 2 | 1 | 1 |
| | Pump discharge pressure (kg/cm2g) | 20 | 35.2 | 35.2 |
| Containment cooling system (CCS) | No. of systems | 2 | 2 | 2 |
| | Design flow (T/hr per system) | 705 | 2960 | 2600 |
| | No. of pumps (per system) | 2 | 2 | 2 |
| | No. of heat exchangers (per system) | 1 | 1 | 1 |
| High pressure coolant injection system (HPCI) | No. of systems | 1 | 1 | 1 |
| | Flow (T/hr) | 682 | 965 | 965 |
| | No. of pumps | 1 | 1 | 1 |
| Low pressure coolant injection system (LPCI) | No. of systems | | 2 | 2 |
| | Flow (T/hr per pump) | | 1750 | 1820 |
| | No. of pumps (per system) | | 2 | 2 |
| Residual heat removal system (RHR) | Pump | | | |
| | No. of pumps | | 4 | 4 |
| | Flow (t/h) | | 1750 | 1820 |
| | Total pump head (m) | | 128 | 128 |
| | Seawater pump | | | |
| | No. of seawater pumps | | 4 | 4 |
| | Flow (m3/h) | | 978 | 978 |
| | Total pump head (m) | | 232 | 232 |
| | Heat exchanger | | | |
| | No. of units | | 2 | 2 |
| | Heat transfer capacity (kcal/h) | | 7.76E+06 | 7.76E+06 |
| Reactor shut-down cooling system (SHC) | Pump | | | |
| | No. of pumps | 2 | | |
| | Flow (m3/h per unit) | 465.5 | | |
| | Pump head (m) | 45.7 | | |
| | Heat exchanger | | | |
| | No. of heat exchangers | 2 | | |
| | Heat exchanging capacity (kcal/h ) | 3.8E+06 | | |
| Reactor core isolation cooling system (RCIC) | Steam turbine | | | |
| | No. of steam turbines | | 1 | 1 |
| | Reactor pressure (kg/cm2g) | | 79-10.6 | 79-10.6 |
| | Output (HP) | | 500-80 | 500-80 |
| | Speed of rotation (rpm) | | 5000-2000 | 4500-2000 |
| | Pump | | | |
| | No. of pumps | | 1 | 1 |
| | Flow (t/h) | | 95 | 97 |
| | Total pump head (m) | | 850-160 | 850-160 |
| | Speed of rotation (rpm) | | Variable | Variable |
| Isolation condenser (IC) | No. of systems | 2 | | |
| | Effective water retention capacity of the tank (m3 per tank) | 106 | | |
| | Steam flow (T/hr per tank) | 100.6 | | |
| Standby gas treatment system (SGTS) | No. of systems | 2 | 2 | 2 |
| | No. of fans (per system) | 1 | 1 | 1 |
| | Exhaust capacity (m3/hr per unit) | 1870 | 2700 | 2700 |
| | Iodine filtration efficiency of the system (%) | ≧ 97 | ≧ 99.9 | ≧ 99.9 |
| Safety valve | No. of valves | 3 | 3 | 3 |
| | Total capacity (T/hr) | 900 | 900 | 900 |
| | Blowout pressure (kg/cm2g) | 86.8 (two valves)<br>87.9 (one valve) | 87.2 | 87.2 |
| | Blowoff area | Drywell | Drywell | Drywell |
| Main steam safety relief valve | No. of valves | 4 | 8 | 8 |
| | Total capacity (T/hr) | 1090 | 2900 | 2900 |
| | Relief valve function | 74.2 kg/cm2g (1 valve) | 75.9 kg/cm2g (1 valve) | 75.9 kg/cm2g (1 valve) |
| | | 74.9 kg/cm2g (2 valves) | 76.6 kg/cm2g (3 valves) | 76.6 kg/cm2g (3 valves) |
| | | 75.6 kg/cm2g (1 valve) | 77.3 kg/cm2g (4 valves) | 77.3 kg/cm2g (4 valves) |
| | Safety valve function | 78.0 kg/cm2g (2 valves) | 78.0 kg/cm2g (2 valves) | |
| | | 78.7 kg/cm2g (2 valves) | 78.7 kg/cm2g (3 valves) | |
| | | | 79.4 kg/cm2g (3 valves) | |
| | Blowoff area | Suppression Chamber | Suppression Chamber | Suppression Chamber |

Table IV-2-2 Accident Management Measures at Fukushima Daiichi and Daini NPSs

| | Fukushima Daiichi | | | Fukushima Daini |
|---|---|---|---|---|
| | Unit 1 (BWR-3) | Units 2 to 5 (BWR-4) | Unit 6 (BWR-5) | Units 1 to 4 (BWR-5) |
| 1. Accident Management Associated with Reactor Shutdown Function | | | | |
| (1) Recirculation Pump Trip (RPT)<br>RPT is a function inducing an automatic trip of the recirculation pump to reduce the reactor power by using an instrumentation and control system that has been installed separate from the emergency reactor shutdown system. | ○ | ○ | ○ | ○ |
| (2) Alternative Control Rod Insertion<br>ARI is a function for automatically opening a newly installed valve and inserting control rods to shut down the reactor upon detecting an abnormality by using an instrumentation and control system that has been installed separate from the emergency reactor shutdown system. | ○ | ○ | ○ | ○ |
| 2. Accident Management Associated with Coolant Injection into Reactor and PCV | | | | |
| (1) Alternative Means of Coolant Injection<br>In order to effectively utilize the existing condensate water make-up systems, fire extinguishing systems, and PCV cooling systems, the destination of the piping is modified so that coolant injection into reactors is possible from these existing systems via systems such as core spray systems, so that they can be used as alternative means of coolant injection facilities. | ○ | ○ | ○ | ○ |
| (2) Automatic Reactor Depressurization (Reactor depressurization is already automatic. Therefore, it should be regarded as improvement in the reliability of ADS.)<br>In the event where only the reactor water level is decreasing due to insufficient high pressure coolant injection during a abnormal transient signals indicating high D/W pressure are not generated, and the automatic depressurization system is not automatically activated in the conventional facilities. Accordingly, the reactor has been modified to be automatically depressurized by using safety relief valves after the occurrence of a signal indicating a low reactor water level, which makes it possible for systems, such as emergency low pressure core cooling systems, to inject coolant into the reactor even in such an event. | — | ○ | ○ | ○ |
| 3. Accident Management Associated with Heat Removal Functions in PCV | | | | |
| (1) Alternative Heat Removal with D/W coolers and Reactor Coolant Cleanup System<br>D/W coolers and reactor coolant cleanup systems are manually activated to remove heat from PCV. The procedure is defined in the accident operation standard. | ○ | ○ | ○ | ○ |
| (2) Recovery of PCV Cooling System (Residual Heat Removal System)<br>Recognition of failures of the PCV cooling system (residual heat removal system), detection of the locations of failures, and recovery work for the failures by maintenance workers are defined in the recovery procedure guidelines as basic procedures. | ○ | ○ | ○ | ○ |
| (3) Compressive Strengthening Vent<br>Reactor containment vent lines with strengthened pressure resistance are installed to be directly connected to stacks from inert gas systems without passing through standby gas treatment systems, so that the applicability of depressurization operation as a means of prevention of over-pressurization in the PCV is extended to improve the heat removal function in PCV. | ○ | ○ | ○ | ○ |
| 4. Accident Management Associated with Support Function for Safety Functions | | | | |
| (1) Interchange of Power Supplies<br>Power supply capacity is improved by constructing tie lines of low-voltage AC power supplies between adjacent reactor facilities. | ○ | ○ | ○ | ○ |
| (2) Recovery of Emergency DGs<br>Recognition of failures of emergency DGs, detection of the location of failures, and recovery work for the failures by maintenance workers are defined in the recovery procedure guidelines as basic procedures. | ○ | ○ | ○ | ○ |
| (3) Dedicated Use of Emergency DGs<br>One of the two emergency DGs was commonly used between adjacent Units. However, new emergency DGs have been installed at Units 2, 4, and 5, so that each DG is used for only one Unit. | ○ | ○ | ○ | ○ |

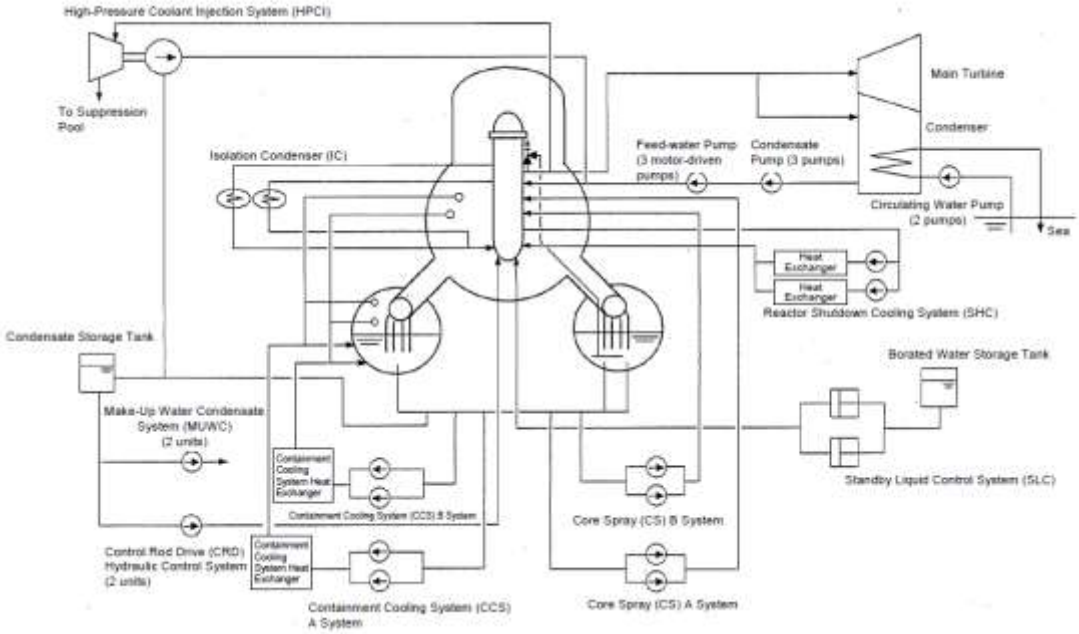


Fig. IV-2-1 System Structure Diagram of Fukushima Daiichi NPS Unit 1

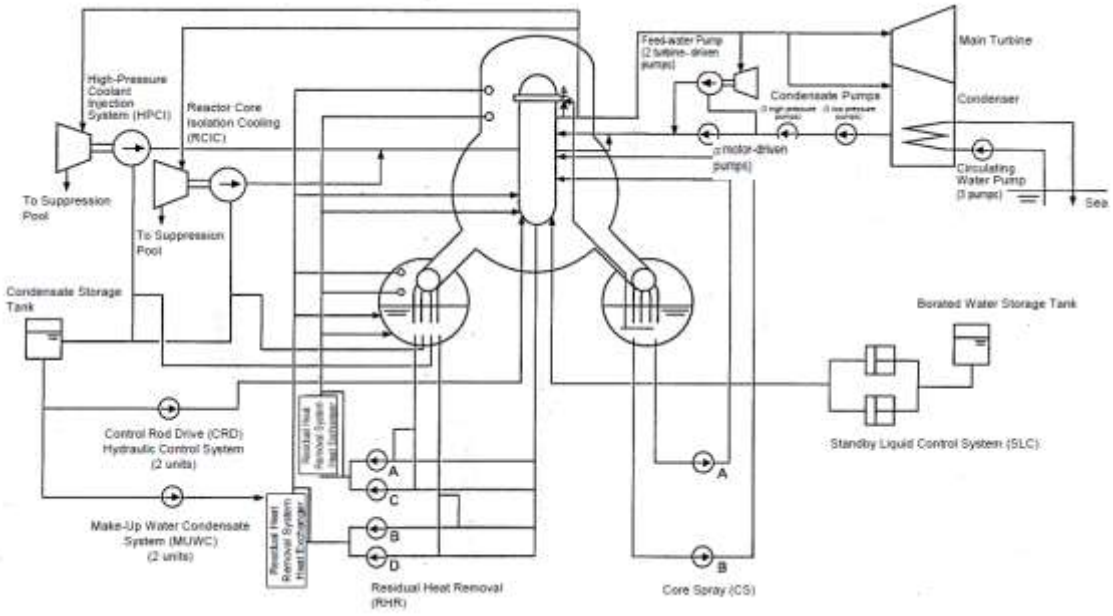


Fig. IV-2-2 System Structure Diagram of Fukushima Daiichi NPS Units 2 and 3

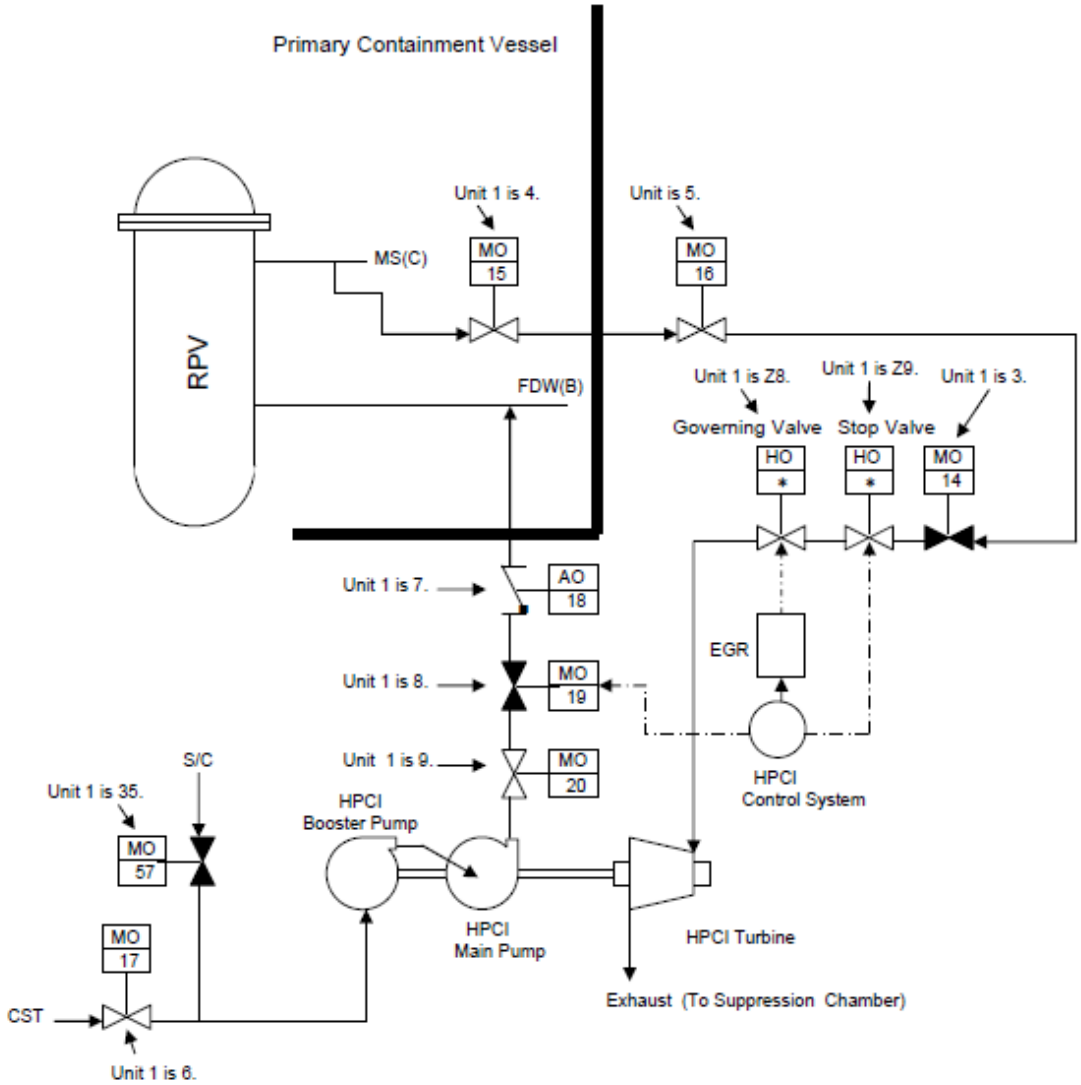


*1: During normal operation, MO-15, 16, 17, 20 and HO valves are "open" and MO-14 and 19 valves are "close".
At startup, 14 and 19 valves are "open".
*2: MO-15 valve is inoperative due to AC power loss. (as-is)
*3: MO-14, 16, 17, 19 and 20 valves are inoperative due to DC power loss (the separate power source from isolation logic circuits). (as-is)
*4: During DC power loss, isolation (close) logic circuits are operative.
At that time, if the drive power of each valve (written in *2 and *3) is activated, each valve is closed. If the drive power of each valve is already lost, the circuits are inoperative. (as-is)

Fig. IV-2-3 System Structure Diagram of High Pressure Coolant Injection System (Units 1 to 3)

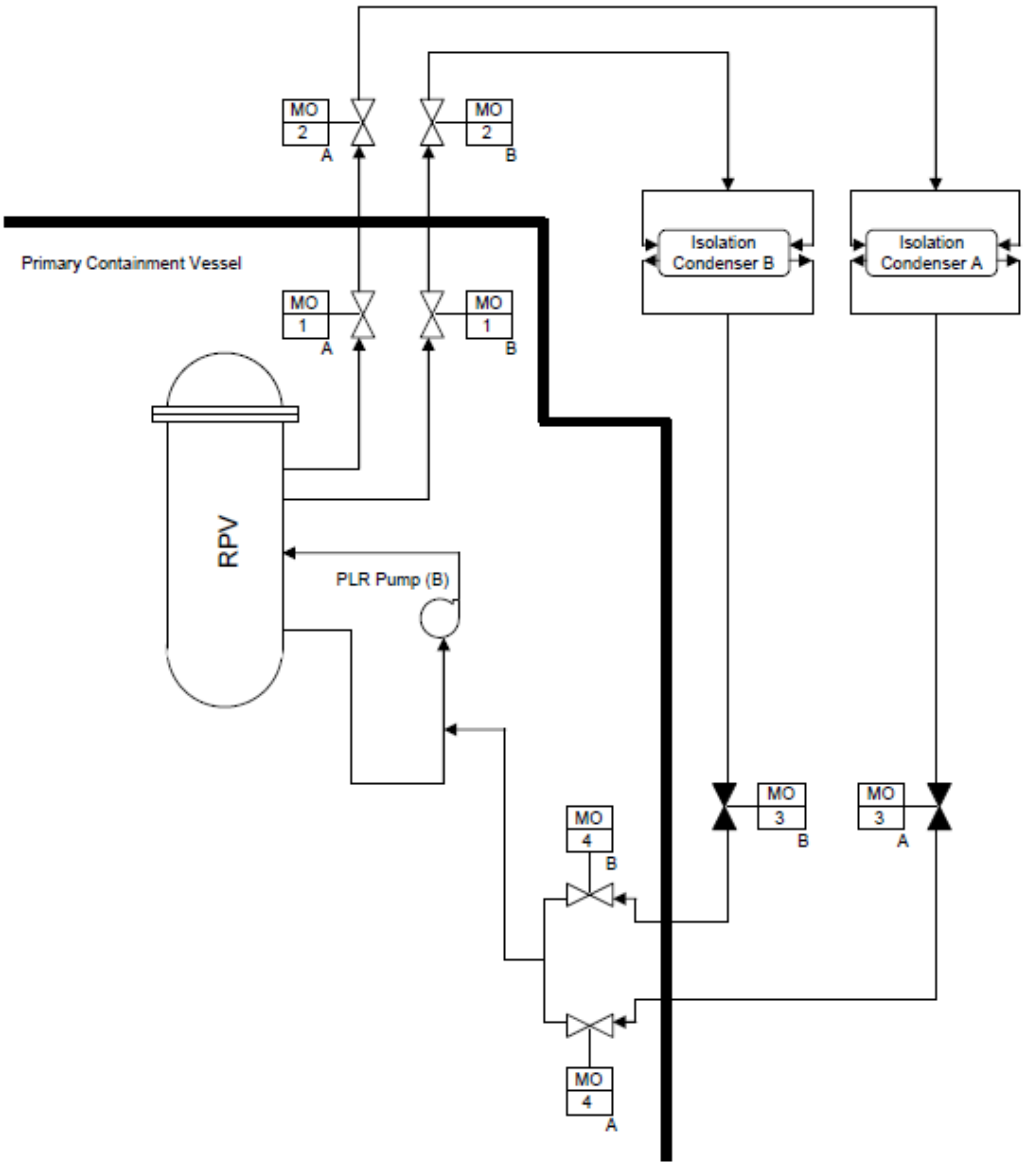


*1: During normal operation (in a standby condition), MO-1, 2 and 4 valves are "open" and MO-3 valve is "close". At startup, MO-3 valve is "open".
*2: MO-1 and 4 valves are inoperative due to AC power loss. (as-is)
*3: MO-2 and 3 valves are inoperative due to DC power loss (the same power source as isolation logic circuits). (as-is)
*4: During DC power loss, isolation (close) logic circuits are operative.
At that time, if the drive power of each valve (written in *2 and *3) is activated, each valve is closed. If the drive power of each valve is lost, the valves are inoperative. (as-is)

Fig. IV-2-4 System Structure Diagram of Isolation Condenser (Unit 1)

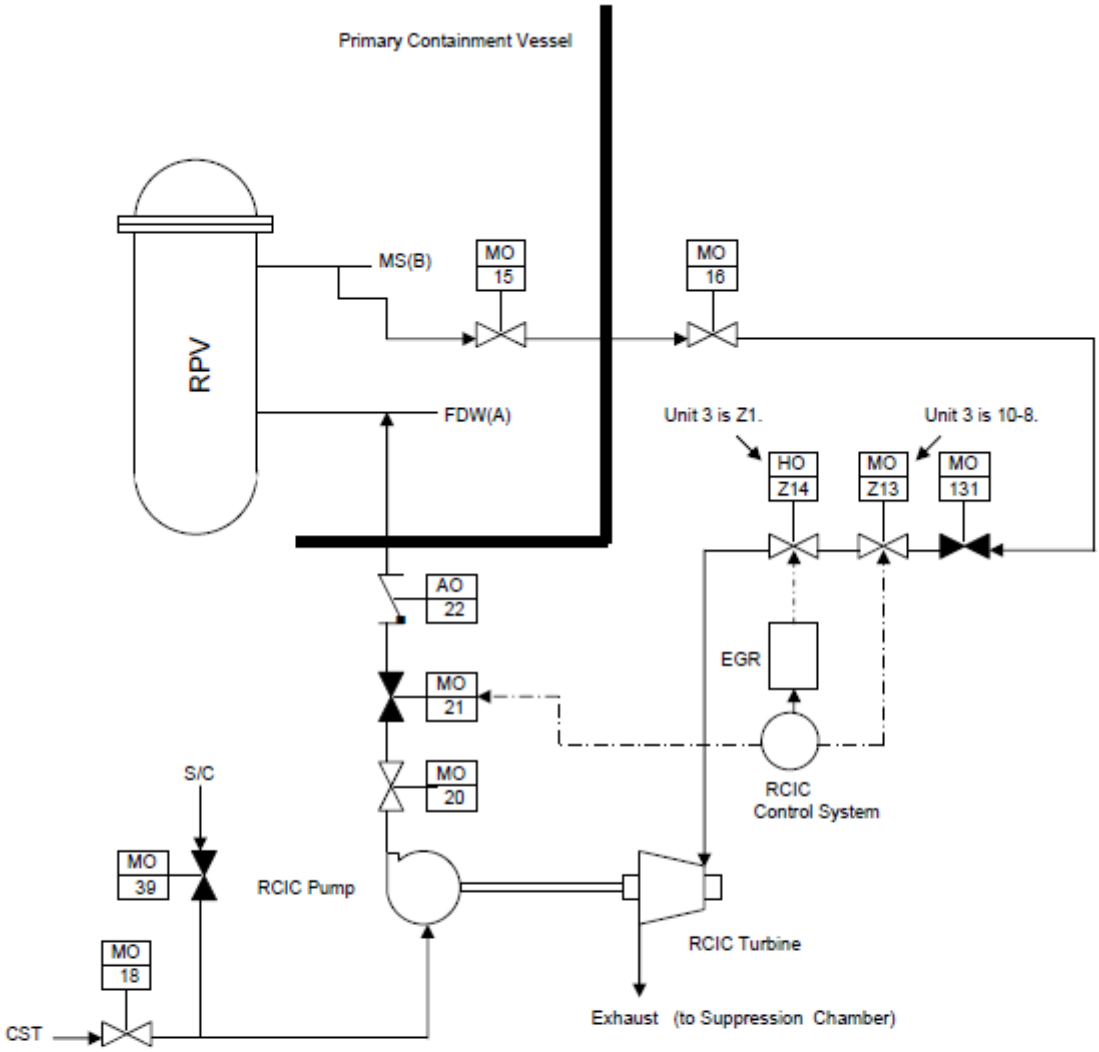


*1: During normal operation (in a standby condition), MO-15, 16, 18, 20 and Z13 valves and HO-Z14 are "open" and MO-131 and 21 valves are "close".
At startup, 131 and 21 valves are "open".
*2: MO-15 valve is inoperative due to AC power loss. (as-is)
*3: MO-16. 18, 20, 21 and 131 valves are inoperative due to DC power loss (the separate power source from isolation logic circuits). (as-is)
*4: During DC power loss, isolation (close) logic circuits are operative.
At that time, the drive power of each valve (written in *2 and *3) is activated, each valve is closed. If the drive power of each valve is already lost, the valves are inoperative. (as-is)

Fig. IV-2-5 System Structure Diagram of Reactor Core Isolation Cooling System (Units 2 and 3)

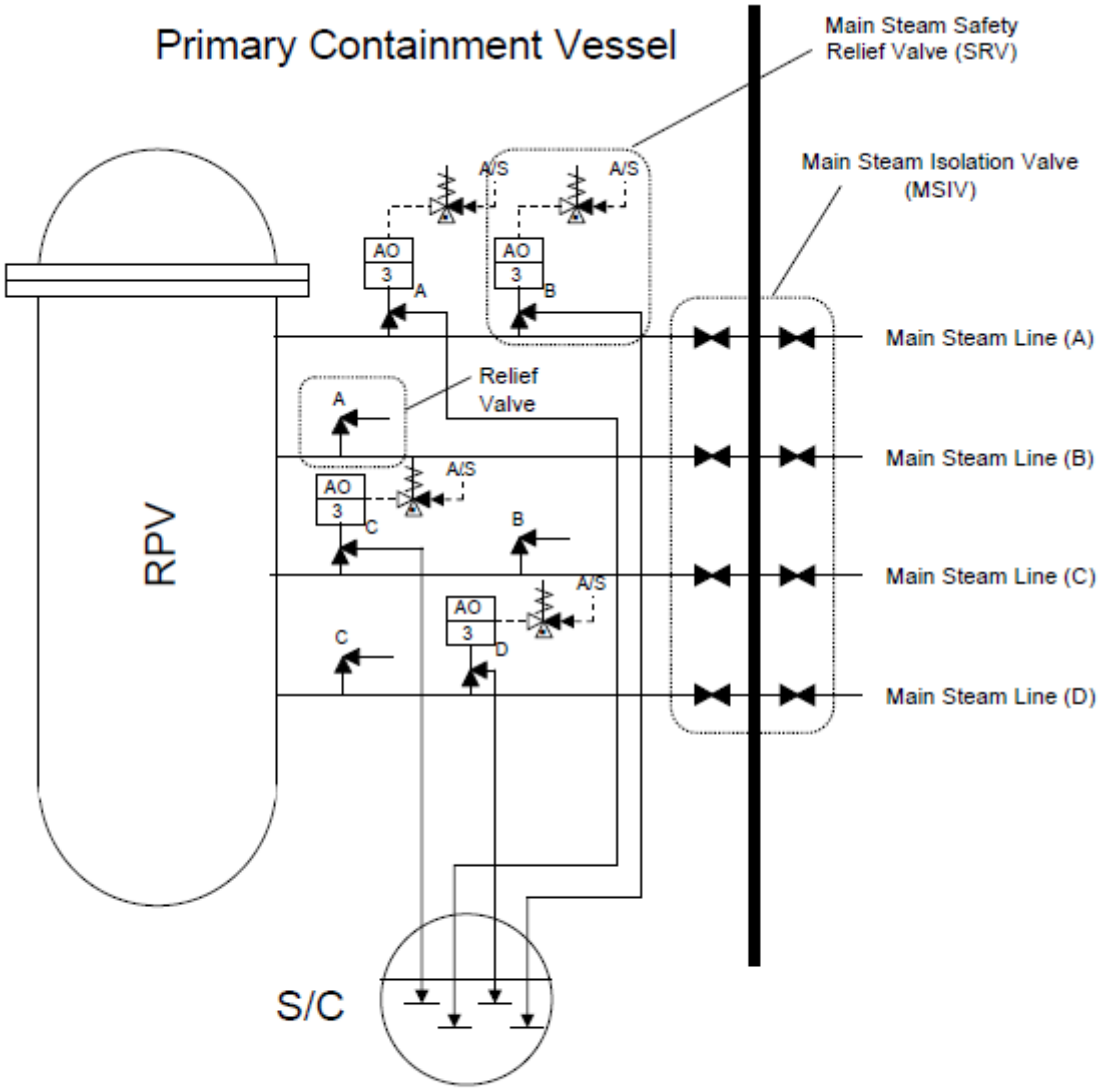


*1: The main steam safety relief valves (4 valves) are AO valves, and open drive air is supplied by the energized solenoid valves of air supply lines.
During power loss, solenoid valves become deenergized and main steam relief valves are in a closed condition.

Fig. IV-2-6 System Structure Diagram of Main Steam Safety Relief Valve
(Unit 1)

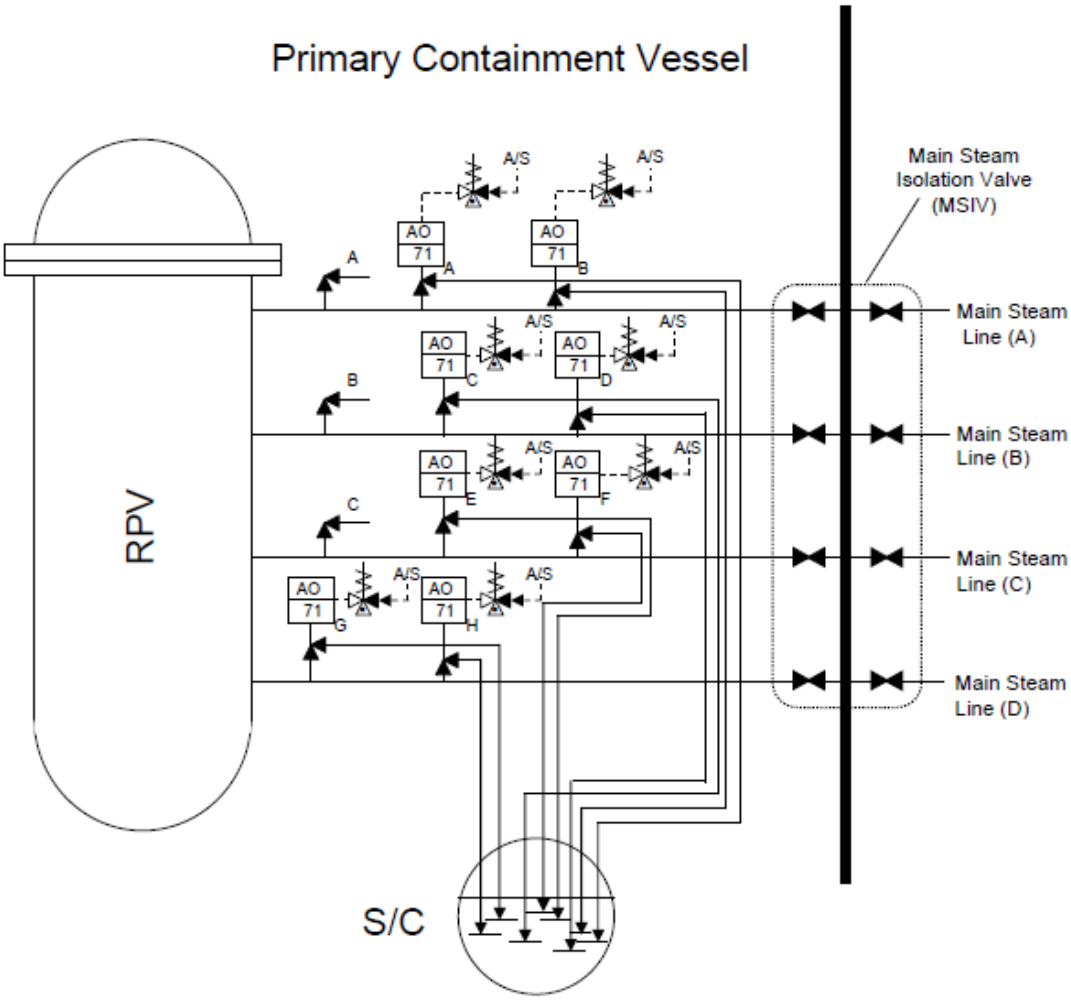


*1: Main steam safety relief valves (8 valves) are AO valves, and open drive air is supplied by the energized solenoid valves of air supply lines.
During power loss, solenoid valves become deenergized and main steam relief valves are in a closed condition.

Fig. IV-2-7 System Structure Diagram of Main Steam Safety Relief Valve (Units 2 and 3)

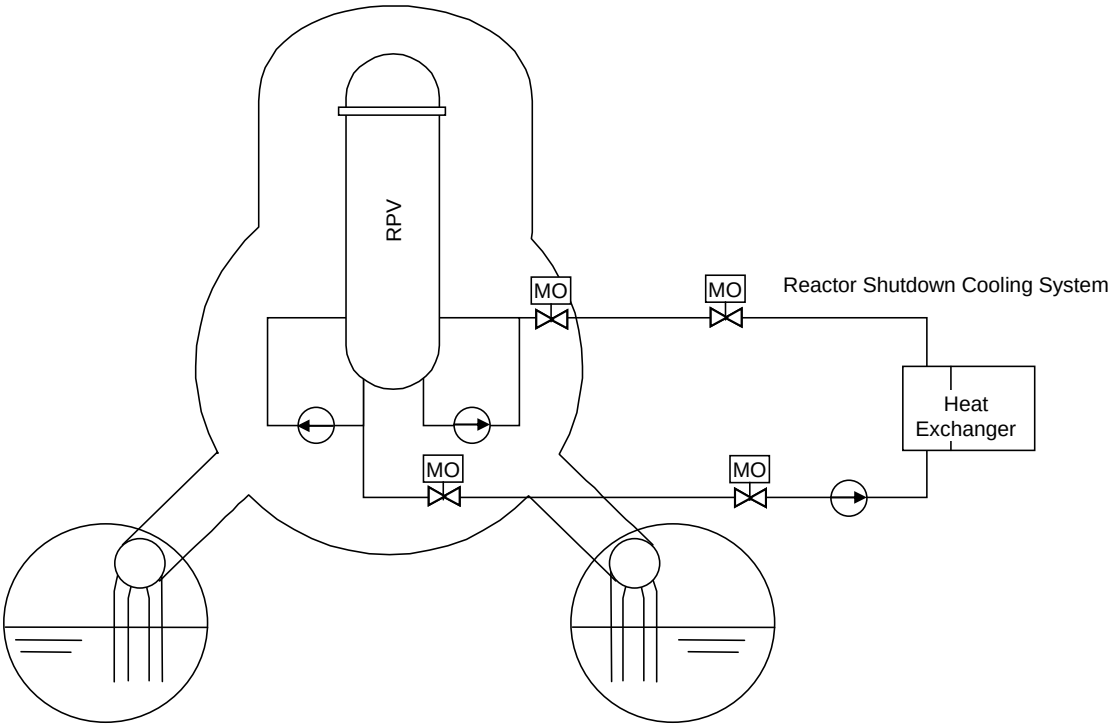


Fig. IV-2-8 System Structure Diagram of Reactor Shutdown Cooling System (Unit 1)

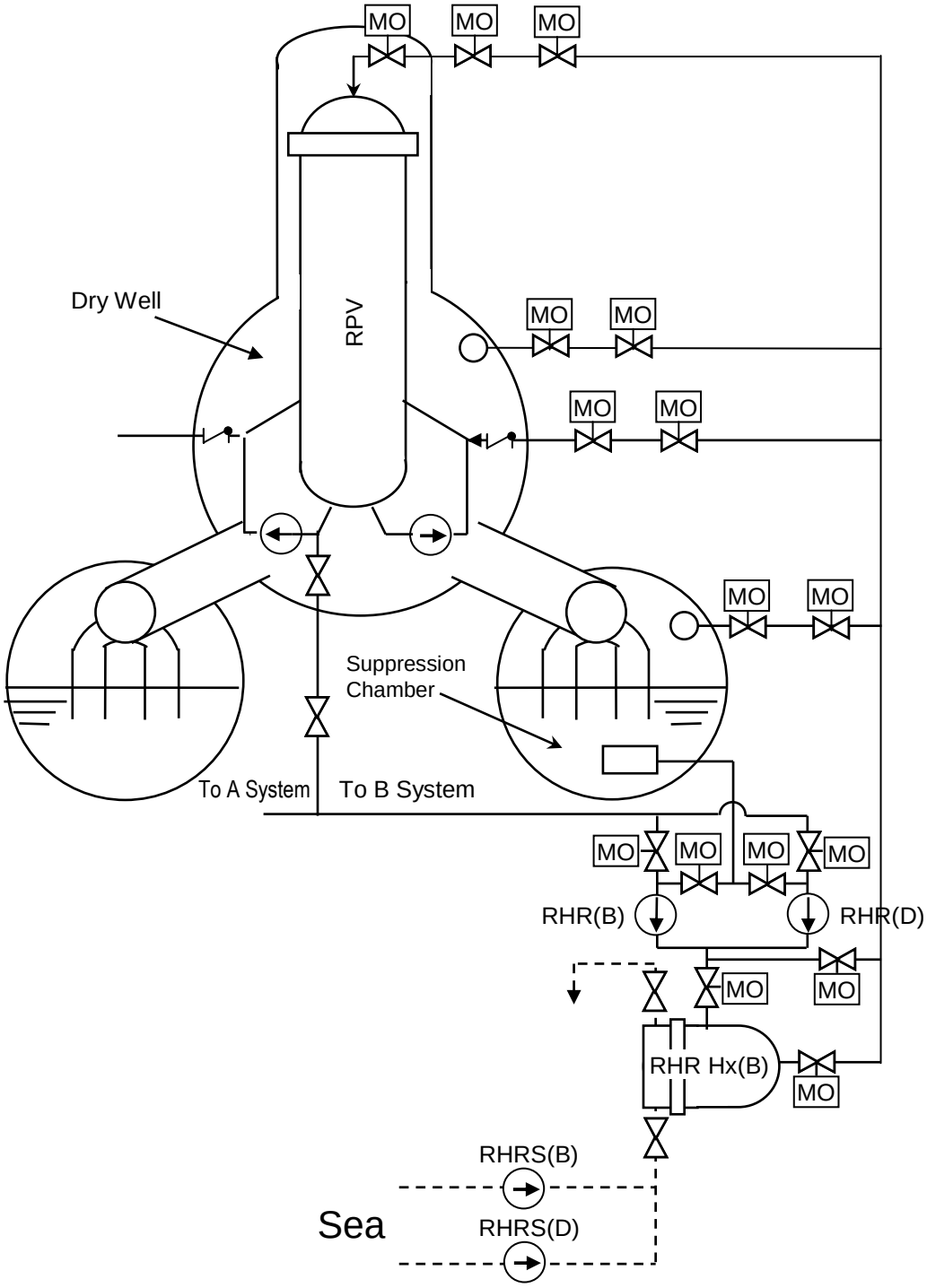


Fig. IV-2-9 System Structure Diagram of Residual Heat Removal System (Units 2 and 3)

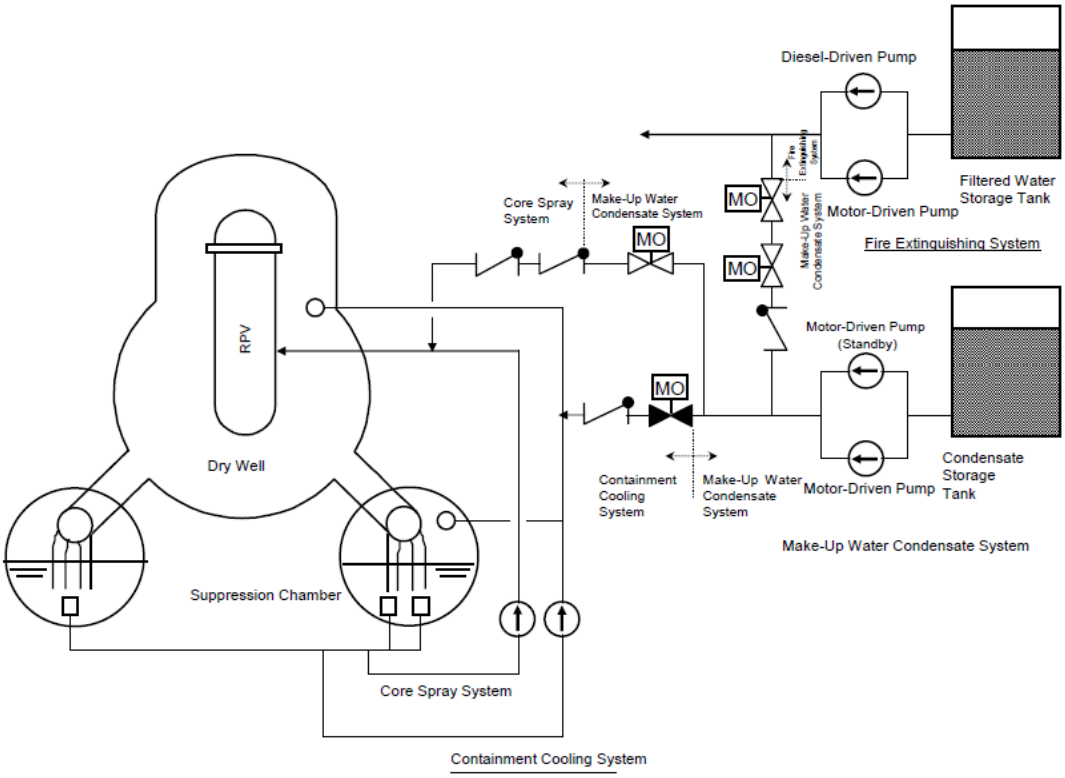


Figure IV-2-10 Overview of the Alternate Water Injection Facility for Unit 1 (by Fresh Water)

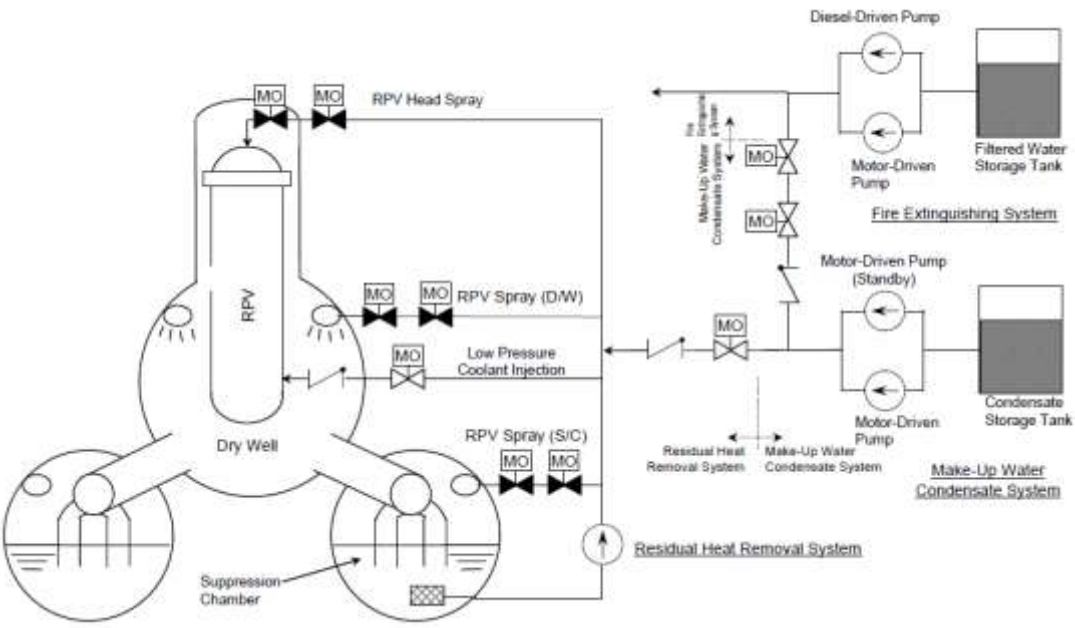


Figure IV-2-11 Overview of the Alternative Water Injection Facility for Units 2 and 3 (by Fresh Water)

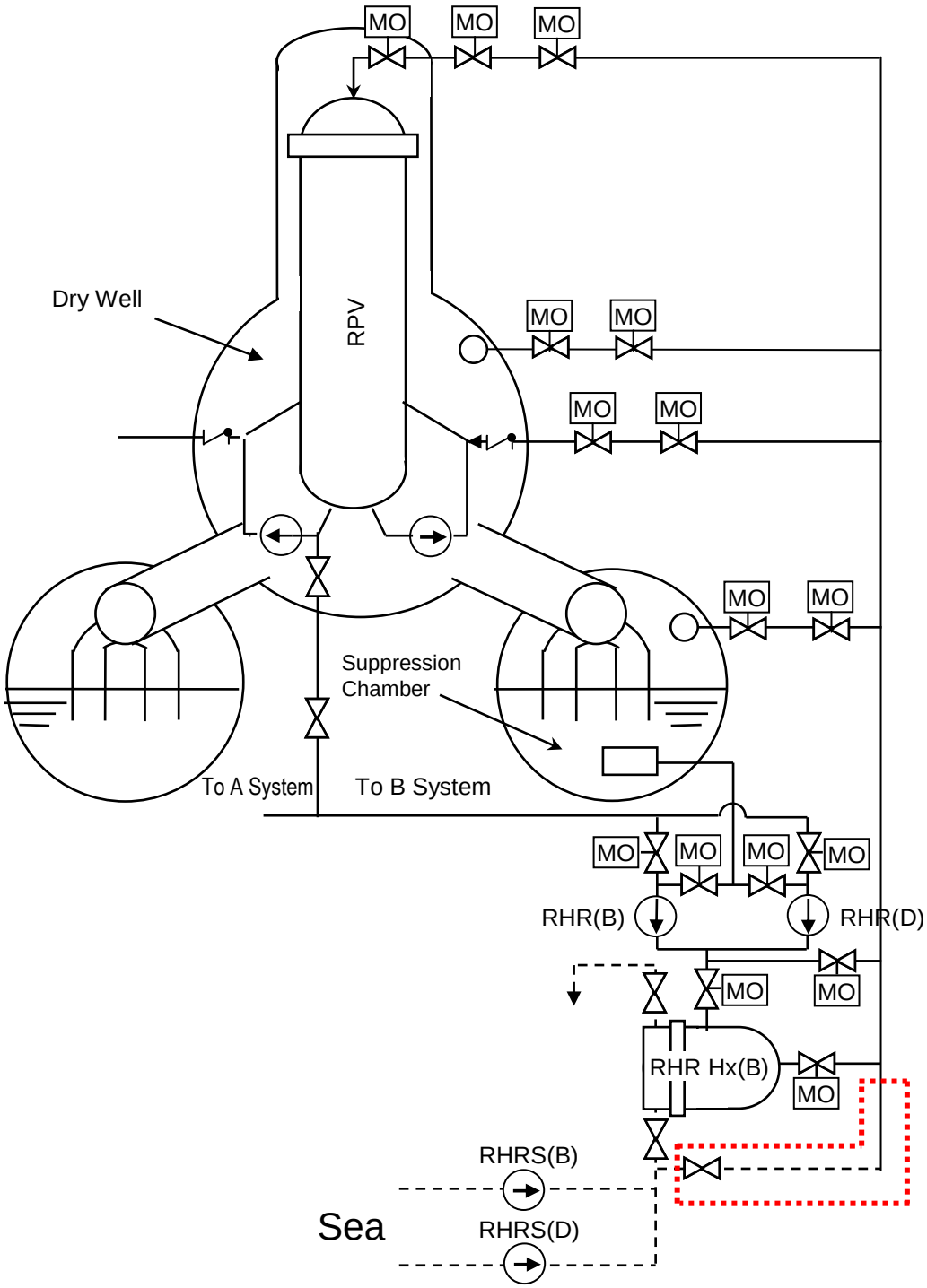


Figure IV-2-12 Overview of the Alternative Water Injection Facility for Unit 3 (by Seawater)

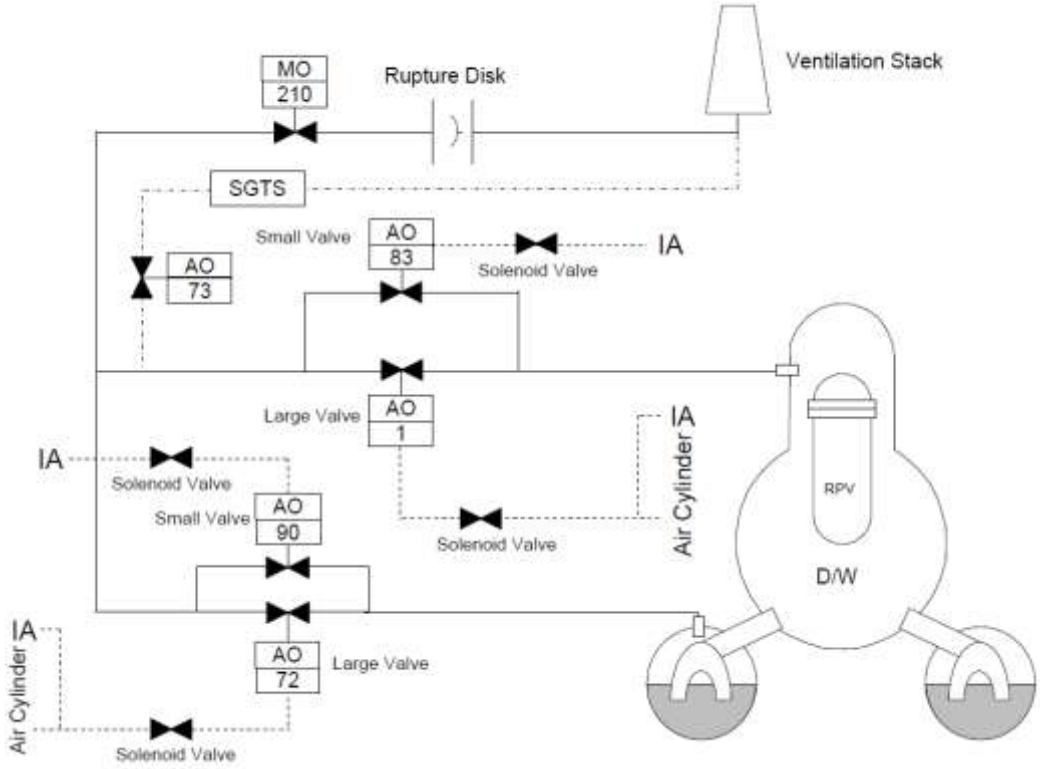


Figure IV-2-13 Overview of PCV Venting Facility (Unit 1)

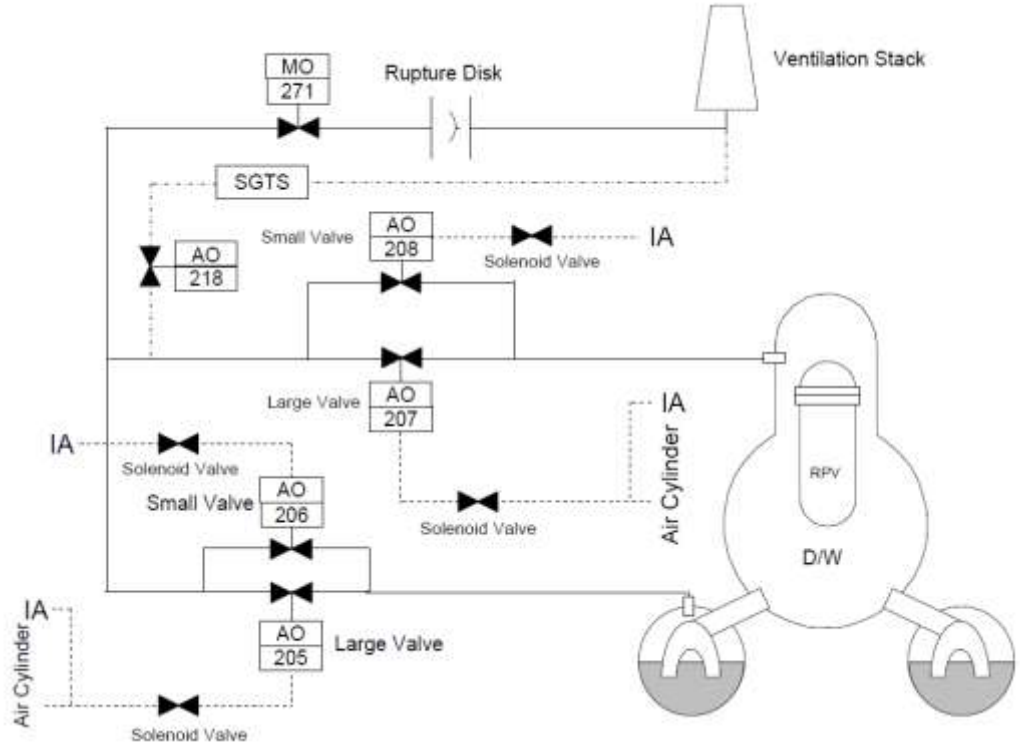


Figure IV-2-14 Overview of PCV Venting Facility (Units 2 and 3)

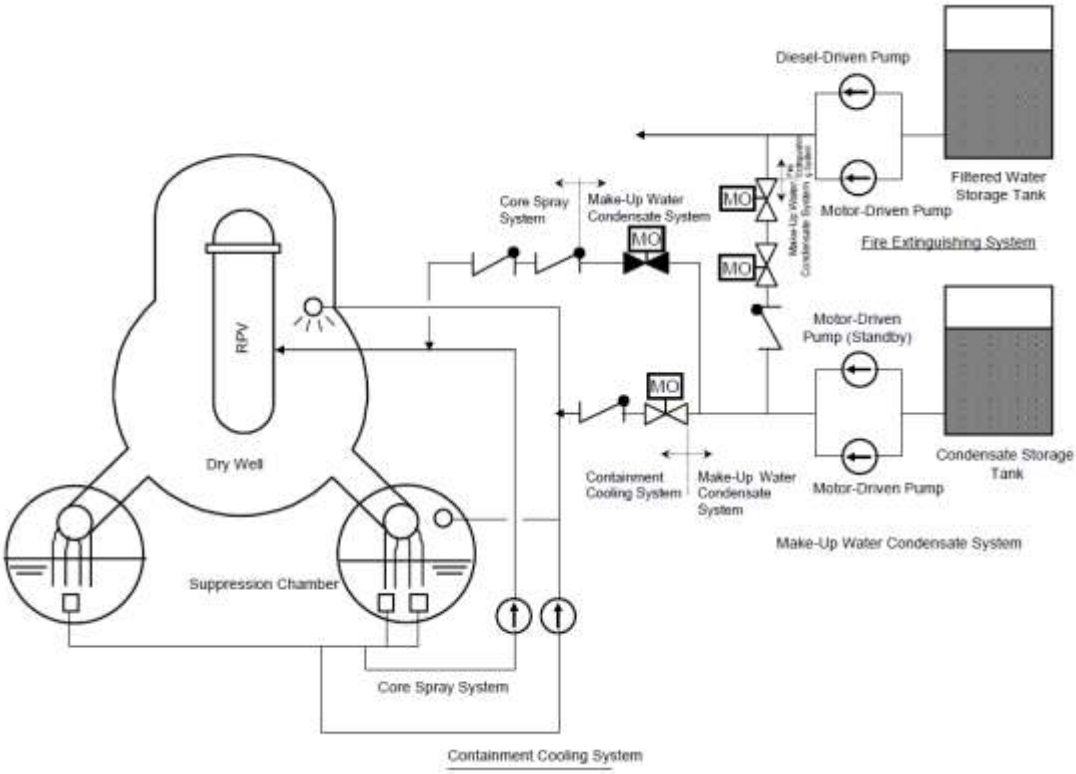


Figure IV-2-15 Overview of PCV Spray (D/W and S/C) Facility (Unit 1)

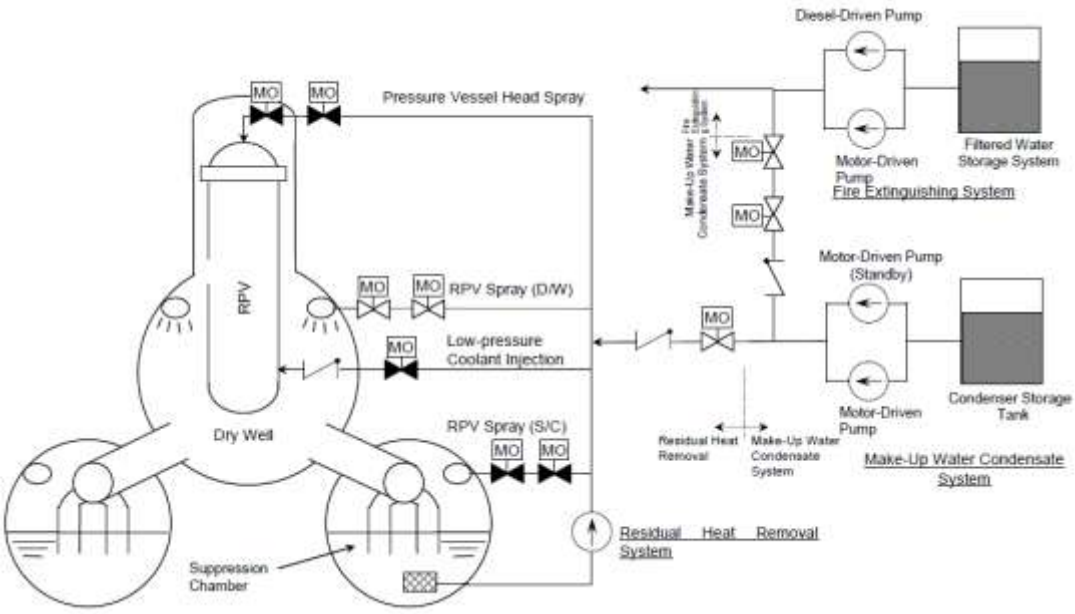


Figure IV-2-16 Overview of PCV Spray (D/W and S/C) Facility (Units 2 and 3)

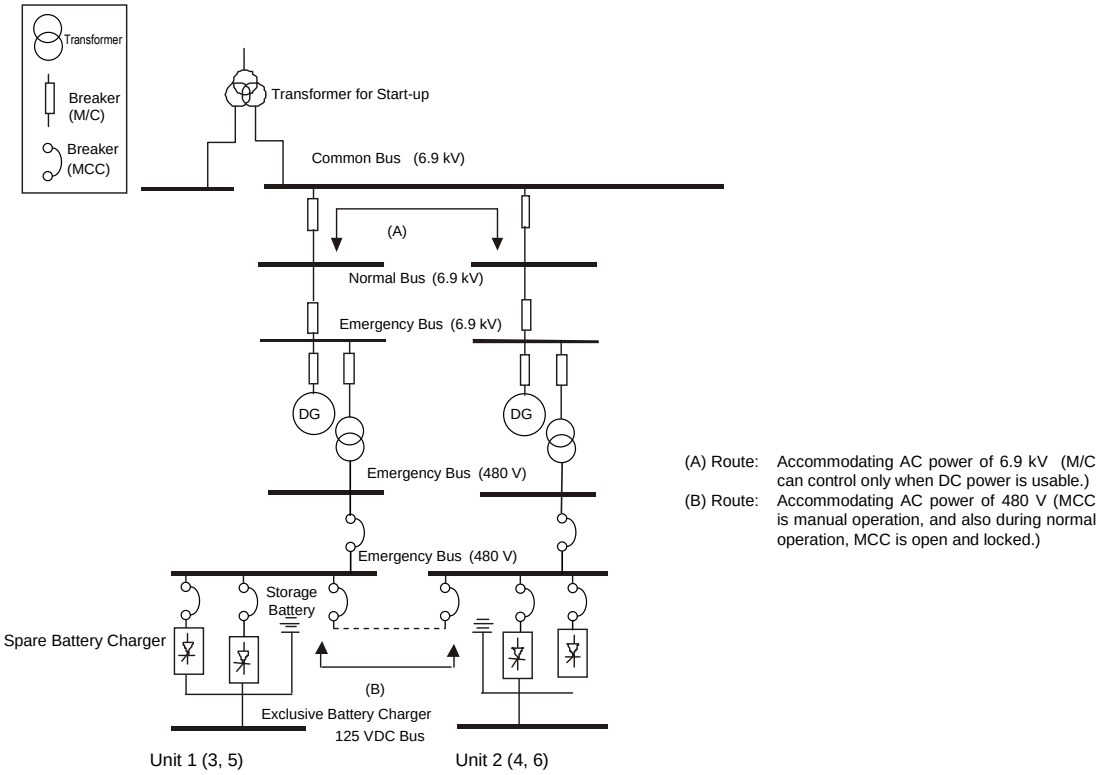


Figure IV-2-17 Conceptual Diagram of Power Supply Interchange among Units

3. Condition of the Fukushima NPSs before the earthquake

(1) Operation

On the day when the earthquake occurred, Unit 1 of the Fukushima Daiichi NPS was in operation at the constant rated electric power, and Units 2 and 3 of the Fukushima Daiichi NPS and all units of the Fukushima Daini NPS were in operation at the constant rated thermal power. The condition of the Fukushima NPSs before the occurrence of the earthquake is indicated in Table IV-3-1.

Fukushima Daiichi NPS Unit 4 was in periodic inspection outage. Large-scale repair work was under way to replace the core shroud, and all fuel assemblies had been transferred to the spent fuel pool from the reactor core with the reactor well filled with water and the pool gate closed.

Fukushima Daiichi NPS Unit 5 was in periodic inspection outage, all fuel assemblies were loaded in the reactor core and the pressure leak test for RPV was being conducted.

Fukushima Daiichi NPS Unit 6 was in periodic inspection outage, and all fuel assemblies were loaded in the reactor core that was in cold shutdown condition.

Table IV-3-1 The Condition of the Fukushima NPSs before the Earthquake

| Power stations and reactor units | | | Condition before the occurrence of the earthquake |
|---|---|---|---|
| Fukushima Daiichi | Unit 1 | Reactor | In operation (400 fuel assemblies) |
| | | Spent fuel pool | 392 fuel assemblies (including 100 new ones) |
| | Unit 2 | Reactor | In operation (548 fuel assemblies) |
| | | Spent fuel pool | 615 fuel assemblies (including 28 new ones) |
| | Unit 3 | Reactor | In operation (548 fuel assemblies, including 32 MOX fuel assemblies) |
| | | Spent fuel pool | 566 fuel assemblies (including 52 new ones; no MOX fuel assembly) |
| | Unit 4 | Reactor | Undergoing a periodic inspection (disconnection from the grid on November 29, 2010; all fuel assemblies were removed; the pool gate closed; and the reactor well filled with water) |
| | | Spent fuel pool | 1,535 fuel assemblies (including 204 new ones) |
| | Unit 5 | Reactor | Undergoing a periodic inspection (disconnection from the grid on January 2, 2011; RPV pressure tests under way; and the RPV head put in place) |
| | | Spent fuel pool | 994 fuel assemblies (including 48 new ones) |
| | Unit 6 | Reactor | Undergoing a periodic inspection (disconnection from the grid on August 13, 2010 and the RPV head put in place) |
| | | Spent fuel pool | 940 fuel assemblies (including 64 new ones) |
| | Common pool | | 6,375 fuel assemblies (stored in each Unit's pool for 19 months or more) |
| Fukushima Daini | Unit 1 | Reactor | In operation (764 fuel assemblies) |
| | | Spent fuel pool | 1,570 fuel assemblies (including 200 new ones) |
| | Unit 2 | Reactor | In operation (764 fuel assemblies) |
| | | Spent fuel pool | 1,638 fuel assemblies (including 80 new ones) |
| | Unit 3 | Reactor | In operation (764 fuel assemblies) |
| | | Spent fuel pool | 1,596 fuel assemblies (including 184 new ones) |
| | Unit 4 | Reactor | In operation (764 fuel assemblies) |
| | | Spent fuel pool | 1,672 fuel assemblies (including 80 new ones) |

(2) Connection of offsite power supply

1) Fukushima Daiichi NPS

Connection of an offsite power supply to the NPS were as follows: Okuma Lines No. 1 and No. 2 (275 kV) of the Shin-Fukushima Substation were connected to the switchyard for Units 1 and 2, Okuma Lines No. 3 and No. 4 (275 kV) were connected to the switchyard for Units 3 and 4, and Yonomori Lines No. 1 and No. 2 (66 kV) were connected to the switching yard for Units 5 and 6. In addition, the TEPCO Nuclear Line (66 kV) from Tomioka Substation of the Tohoku Electric Power was connected to Unit 1 as the spare line.

The three regular high voltage switchboards (6.6 kV) are used for Unit 1, for Unit 2, and for Units 3 and 4, respectively. The regular high voltage switchboards for Unit 1 and for Unit 2 were interconnected, and the regular high voltage switchboards for Unit 2 and for Units 3 and 4 were interconnected in a condition that enabled the electricity fed each other. When the earthquake occurred, the switching facilities for Okuma Line No. 3 in the switchyard for Units 3 and 4 were under construction, so that six lines were available for power of the NPS from offsite power supply.

2) Fukushima Daini NPS

A total of four lines of offsite power supply from the Shin-Fukushima Substation were connected to the Fukushima Daini NPS: Tomioka Lines No. 1 and No. 2 (500 kV) and Iwaido Lines No. 1 and No. 2 (66 kV).

When the earthquake occurred, Iwaido Line No. 1 was under construction, so that three lines were available for power of the NPS from offsite power supply.

4. Occurrence and progression of the accident at the Fukushima NPSs

(1) Overview of the chronology from the occurrence of the accident to the emergency measures taken

1) Fukushima Daiichi NPS

The earthquake which occurred at 14:46 on March 11, 2011 brought all of the Fukushima Daiichi NPS Units 1 through 3, which were in operation, to an automatic shutdown due to the high earthquake acceleration.

Due to the trip of the power generators that followed the automatic shutdown of the reactors, the station power supply was switched to the offsite power supply. As described in Chapter III, the NPS was unable to receive electricity from offsite power transmission lines mainly because some of the steel towers for power transmission outside the NPS site collapsed due to the earthquake. For this reason, the emergency DGs for each Unit were automatically started up to maintain the function for cooling the reactors and the spent fuel pools.

Later, all the emergency DGs except one for Unit 6 stopped because the emergency DGs, seawater systems that cooled the emergency DGs, and metal-clad switchgears were submerged due to the tsunami that followed the earthquake, and the result was that all AC power supply was lost at Units 1 to 5.

At 15:42 on March 11, TEPCO determined that this condition fell under the category of specific initial events defined in Article 10 of the Act on Special Measures Concerning Nuclear Emergency Preparedness (hereinafter referred to as Nuclear Emergency Preparedness Act) and notified the national government, local governments, and other parties concerned.

At 16:36 on the same day, TEPCO found the inability to monitor the water level in the reactors of Units 1 and 2, and determined that the conditions of Unit 1 and 2 fell under the category of an event that is “unable to inject water by the emergency core cooling system” as defined in Article 15 of the Nuclear Emergency Preparedness Act, and at 16:45 on the same day, the company notified NISA and other parties concerned of this information.

TEPCO opened the valve of the IC System A of Unit 1 IC, and in an effort to maintain the functions of the IC, it continued to operate it mainly by injecting fresh water into its shell side. Immediately after the tsunami, TEPCO could not

confirm the operation of the RCIC system of Unit 2, but confirmed about 3:00 on March 12 that it was operating properly. Unit 3 was cooled using its RCIC system, and as a result, the PCV pressure and water levels remained stable.
In order to recover the power supply, TEPCO took emergency measures such as making arrangements for power supply vehicles while working with the government, but its efforts were going rough.

Later, it was confirmed around 23:00 on March 11 that the radiation level in the turbine building of Unit 1 was increasing. In addition, at 0:49 on March 12, TEPCO confirmed that there was a possibility that the PCV pressure of the Unit 1 had exceeded the maximum operating pressure and determined that the event corresponded to the event 'abnormal increase in the pressure in the primary containment vessel' as defined in the provisions of Article 15 of the Nuclear Emergency Preparedness Act. For this reason, in accordance with Article 64, Paragraph 3 of the Reactor Regulation Act, the Minister of Economy, Trade and Industry ordered TEPCO to reduce the PCV pressure of Units 1 and 2.

At 5:46 on March 12, the company began alternative water injection (fresh water) for Unit 1 using fire engines. (The conceptual diagram of alternative water injection using fire engines is shown in Figure IV-4-1.) In addition, TEPCO began preparations for PCV venting because the PCV pressure was high, but the work ran into trouble because the radiation level in the reactor building was already high. It was around 14:30 on the same day that a decrease in the PCV pressure level was actually confirmed. Subsequently, at 15:36 on the same day, an explosion was considered as a hydrogen explosion occurred in the upper part of the Unit 1 reactor building.

Meanwhile, the RCIC system of Unit 3 stopped at 11:36 on March 12, but later, the HPCI system was automatically activated, which continued to maintain the water level in the reactor at a certain level. It was confirmed at 2:42 on March 13 that the HPCI system had stopped. After the HPCI system stopped, TEPCO performed wet venting to decrease the PCV pressure, and fire engines began alternative water injection (fresh water) into the reactor around 9:25 on March 13. In addition, PCV venting was performed several times. As the PCV pressure increased, PCV venting was performed several times. As a result, the PCV pressure was decreased. Subsequently, at 11:01 on March 14, an explosion that was considered as a hydrogen explosion occurred in the upper part of the reactor building.

At 13:25 on March 14, TEPCO determined that the RCIC system of Unit 2 had stopped because the reactor water level was decreasing, and began to reduce the

RPV pressure and inject seawater into the reactor using fire-extinguishing system lines. The wet venting line configuration had been completed by 11:00 on March 13, but the PCV pressure exceeded the maximum operating pressure. At 6:00 on March 15, an impulsive sound that could be attributed to a hydrogen explosion was confirmed near the suppression chamber (hereinafter referred to as S/C), and later, the S/C pressure decreased sharply.

The total AC power supply for Unit 4 was also lost due to the earthquake and tsunami, and therefore, the functions of cooling and supplying water to the spent fuel pool were lost. Around 6:00 on March 15, an explosion that was considered as a hydrogen explosion occurred in the reactor building, damaging part of the building severely.

At 22:00 on March 15, in accordance with Article 64, Paragraph 3 of the Reactor Regulation Act, the Minister of Economy, Trade and Industry ordered TEPCO to inject water into the spent fuel pool of Unit 4. On March 20 and 21, fresh water was sprayed into the spent fuel pool of Unit 4. On March 22, a concrete pump truck started to spray seawater onto the pool, followed by the spraying of fresh water instead of seawater, which began on March 30.

On March 17, a Self-Defense Forces helicopter sprayed seawater into the spent fuel pool of Unit 3 from the air. Later, seawater was sprayed into the pool using high-pressure water-cannon trucks of the National Police Agency's riot police and the Self-Defense Forces, as well as fire engines of the Tokyo Fire Department, Osaka City Fire Bureau, and Kawasaki City Fire Bureau.

Later, the concrete pump truck started to spray seawater into the spent fuel pool of Unit 3 on March 27 and into the spent fuel pool of Unit 1 on March 31.

The total AC power supply for Unit 5 was also lost due to the earthquake and tsunami, resulting in a lost of the ultimate heat sink. As a result, the reactor pressure continued to increase, but TEPCO managed to maintain the water level and pressure by injecting water into the reactor by the reactor shutdown cooling (SHC) mode after the power was supplied from Unit 6. Later, the company activated a temporary seawater pump, bringing the reactor to a cold shutdown condition at 14:30 on March 20.

One of the emergency DGs for Unit 6 had been installed at a relative high location, and as a result, its functions were not lost even when the NPS was hit by the tsunami, but the seawater pump lost all functionality. TEPCO installed a temporary seawater pump while controlling the reactor water level and pressure

by injecting water into the reactor and reducing the reactor pressure on a continuous basis. By doing this, the company recovered the cooling functions of the reactor, thus bringing the reactor to a cold shutdown condition at 19:27 on March 20.

After the accident, seawater was used for cooling the reactors and the spent fuel pools for a certain period of time, but the coolant has been switched from seawater to fresh water with consideration given to the influence of salinity.

2) Fukushima Daini NPS

Units 1 through 4 of the Fukushima Daini NPS were all in operation but automatically shutdown due to the earthquake. Even after the occurrence of the earthquake, the power supply needed for the NPS was maintained through one of the three external power transmission lines that had been connected before the disaster. (Incidentally, the restoration work for another line was completed at 13:38 on March 12, enabling the NPS to receive electricity through two external power transmission lines.) Later, the tsunami triggered by the earthquake hit the NPS, making it impossible to maintain reactor cooling functions because the seawater system pumps for Units 1, 2, and 4 could not be operated.

For this reason, at 18:33 on March 11, TEPCO determined that a condition had occurred that fell under the category of events specified in Article 10 of the Nuclear Emergency Preparedness Act and notified the national government, local governments, and other parties concerned of this information. Later, since the temperature of the suppression chamber exceeded 100°C, and the reactor lost its pressure suppression functions, the company determined that an event where “pressure suppression functions are lost” defined in Article 15 of the Nuclear Emergency Preparedness Act had occurred at Unit 1 at 5:22 on March 12, at Unit 2 at 5:32 on the same day, and at Unit 4 at 6:07 on the same day, and notified the Nuclear and Industrial Safety Agency and other parties concerned of this information.

Units 1, 2 and 4 of the Fukushima Daini NPS recovered their cooling functions due to the restoration work that followed the earthquake because the offsite power supply was maintained, and the metal-clad switchgears, DC power supply, and other facilities were not submerged. As a result, Unit 1 was brought to a cold shutdown condition, in which the temperature for reactor coolants goes down below 100°C, at 17:00 on March 14, Unit 2 at 18:00 on the same day, and Unit 4 at 7:15 on March 15. Unit 3 was brought to a cold shutdown condition at 12:15 on March 12 without losing reactor cooling functions and suffering other kinds of damage.

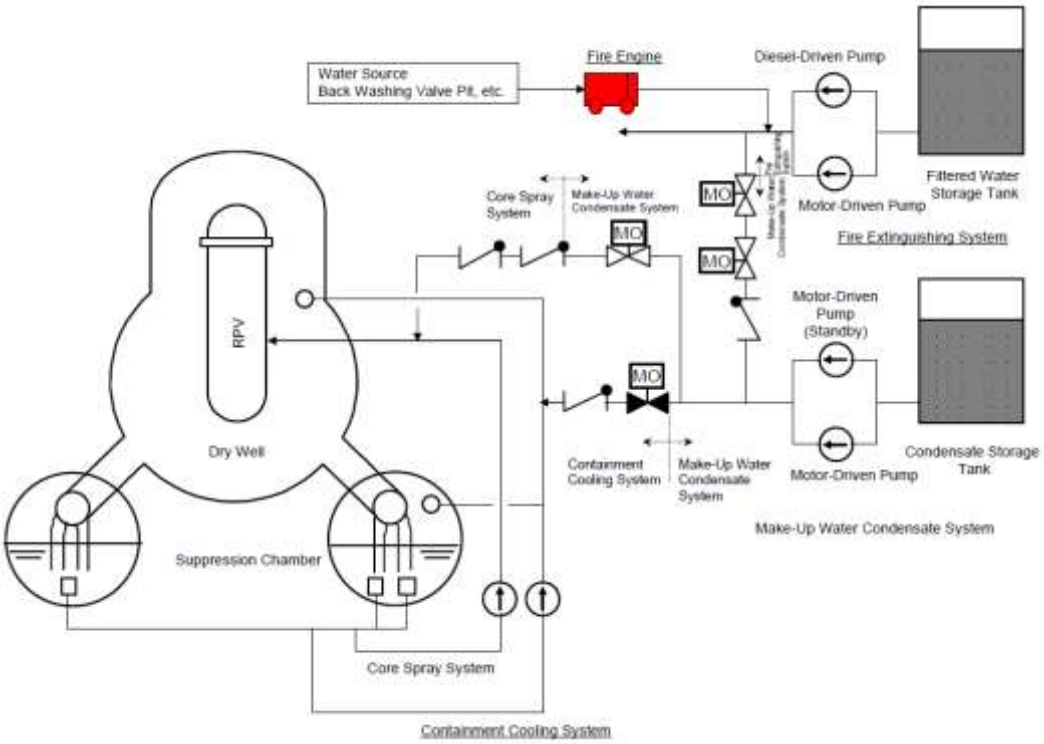


Figure IV-4-1 Conceptual Diagram of Alternative Water Injection Using Fire Engines

## 5. Situation of Each Unit etc. at Fukushima NPS

The outline of the accident at Fukushima NPS has been given in Chapter 4. This accident involved a total loss of the AC power supply, so after the tsunami invasion, we were only able to get extremely limited parameter information.

This section covers the parameter information we have been able to get to this point, under these very difficult conditions.

In addition, in order to supplement this limited information, TEPCO carried out analysis and evaluation of reactor situation of Unit 1,Unit 2 and Unit 3 using MAAP, which is a Severe Accident Analysis Code, based on gained operating records and parameters. The results were reported to NISA on May 23. NISA carried out a crosscheck by using other severe Accident Analysis Code, MELCOR in order to cross-check for validation of TEPCO's analysis with the assistance of Incorporated Administrative Agency Japan Nuclear Energy Safety Organization in order to confirm the adequacy of the analysis and evaluation concerned by using MELCOR, another severe accident analysis code. The report of analysis and evaluation conducted by Tokyo Electric Power Company is shown in Appended Reference IV-1, and analytic results by crosscheck are shown in Appended Reference IV-2.

Note that this parameter information was left behind in the Main Control Room and other areas after the accident and took some time to recover, so TEPCO made it public on May 16, along with reporting it to NISA.

In addition, based on these analysis results, we have evaluated the event progress of this accident and made some estimates in areas such as the RPV, PCV, etc. situation regarding their relationship with changes over time and the events that occurred.

Our evaluation of the development of events regarding the nuclear reactors for each unit at Fukushima NPS is written up as shown below.

(1)We sorted out the plant information we have obtained as of the current moment and summarized it in chronological order.

(2)We need to check the reliability of the parameter information etc. we obtained in order to evaluate the accident event progress, so this was considered based on the relationships

with the performance of each plant operation, the overall behavior, the parameter information, and so on.

(3)Based on the conditions we considered in (2), we carried out a Severe Accident analysis, and analyzed the event development of the reactor accidents.

(4)In order to evaluate RPV, PCV, etc., we first estimated the RPV, PVC, etc. situation when they were relatively stable. Then we used the estimated event progress to estimate the RPV, PCV, etc. situation as it changed with time.

(5)We carried out a comparative consideration from the analysis in (3) and the RPV, PCV, etc. estimate results in (4). Then we evaluated how the series of events of accident progressed.

In terms of events outside the reactor, in our summary in (1) we sorted out the related situations. In addition, we also analyzed the explosion damage to the reactor building in Unit 4 of the Fukushima Daiichi NPS. We then went on to sort out and sum up separately from the listings for each unit the fuel cooling work being done in the spent fuel pool and the situation (and treatment situation) for the pool water that has been confirmed in the trenches and other areas outside the building, and in the turbine building of each unit.

Note that the estimates shown here are estimates of the possible situation based on the plant information we have been able to get at the present stage. We will need to update our deliberations as appropriate based on any supplemental information, such as details of parameter information or event information, and severe accident analysis results that reflect these.

(1) Fukushima Daiichi NPS, Unit 1

1) Chronological arrangement of accident event progress and emergency measures

a From the earthquake to the invasion of the tsunami

As shown in Chapter 3, before the earthquake the power station was operating steadily at its rated power. Immediately after the earthquake struck, at 14:16 on March 11, the reactor of Unit 1 scrammed due to the excessive earthquake acceleration, and at 14:47 the control rods were fully inserted and the reactor became subcritical, and it was shutdown normally. In addition, the earthquake damaged the power reception breakers on the NPS side of the Okuma No. 1 and No. 2 Power Transmission Lines and other areas, so there was a loss of external power. This meant that two emergency diesel

generators automatically started up.

At 14:47, the loss of the power supply to the instruments due to the loss of external power caused the failsafe to send a signal to close the Main Steam Isolation Valve (hereinafter referred to as MSIV), and the MSIV was closed down. Regarding this point, since the increase in the main steam flow volume that would be measured if the main steam piping was broken, was not confirmed in the Past Event Records Device, TEPCO judged that judged that there were no breaks in the main steam piping and NISA considers that is a logical reason to make that judgment.

The shutoff of the MSIV increased the RPV pressure, and at 14:52 the IC automatically started up. Next, in accordance with the operating manual for the IC, at 15:03 the IC was manually shut down. The manual notes that the temperature decrease rate for the RPV should be adjusted to not exceed 55°C/h. Moreover, the reactor pressure varied three times between 15:10 and 15:30, and TEPCO performed manual operations using only the A-system of the IC. Note that when the IC is operated, the steam is condensed and cooled, and is returned into the reactor as cold water through the reactor recirculation system. The records of the temperatures at the entrance to the reactor recirculation pump show three drops in temperature, so this is assumed to be the effects of the manual operation of the IC.

Meanwhile, in order to cool the S/C, at approx. 15:07 and 15:10 the B and A systems of PCV spray system were activated.

For the one hour that they remained following the earthwork, the HPCI records show no indications of any drop to the automatic activation water level (L-L) or any records of the HPCI being activated.

b Effects from the tsunami

At 15:37, the effects of the tsunami were felt, and the water, meaning that two emergency diesel generators stopped operation, and the emergency bus distribution panel was submerged, leading to all AC power being lost, affected both the seawater pump and the metal-clad switchgear of Unit 1. Unit 2 also suffered a loss of all AC power, so it was not possible to supply power from Unit 2.

In addition, the loss of DC power functions meant that it was not possible to check the parameter information. With the reactor water level no longer able to be monitored, and the water injection situation unclear, there was the possibility that no water was being injected, so at 16:36 TEPCO judged that an correspond event (non-operation of emergency core coolant device injection) according to the provisions of Article 15, Paragraph 1 of the NEPA had occurred. Additionally, the loss of function of the component cooling system seawater pump meant that the seawater system was lost, and the SHC was not able to be used, so it was not possible to relocate the decay heat of the PCV to the sea, the ultimate heat sink.

c Emergency measures

TEPCO opened the A system valve on the IC and used the diesel-driven fire pump (hereinafter referred to as D/D FP) to pump fresh water into the body of the IC etc., in an attempt to maintain the IC functions. However, according to the results from the valve circuit investigation TEPCO carried out in April, the degree the valve was open is not clear, so it is not possible to judge the extent to which the IC was functioning at this point in time (end of May). In addition, it has been confirmed that the radiation level inside the turbine building increased at around 23:00 on March 11.

TEPCO confirmed that there was the possibility that the PCV pressure had exceeded the maximum operating pressure at 00:49 on March 12, and judged that an correspond event (abnormal increase of containment vessel pressure) according to the provisions of Article 15, Paragraph 1 of the NEPA had occurred and informed NISA. As a result, at 6:50 on March 12, the Minister of Economy, Trade and Industry ordered the suppression of the PCV pressure in Units 1 and 2, in accordance with the provisions in Article 64, Paragraph 3 of the Reactor Regulation Act.

TEPCO started pumping alternative water injection (fresh water) through fire pumps at 5:46 on March 12. Therefore, since cooling using the IC had stopped due to the failure of all AC power at 15:37 on March 11, that meant that there was a 14-hour-and-9-minute period when cooling using pumped water had stopped.

TEPCO worked to vent the PCV in order to lower its pressure. However, since radiation inside the reactor building was already at the high radiation environment level, the work proceeded with difficulty. The motor-operated valve (MO valve) in the PCV vent line

was manually opened to 25% at about 9:15 on March 12. In addition, workers headed to the site to open the air-operated valve (AO valve) manually but the radiation levels were too high. As a result, a temporary air pressurization machine was set up to drive the AO valve and the PCV vent was operated. TEPCO judged that the PCV vent had succeeded since the PCV pressure had been reduced by 14:30.

d The building explosion and measures taken subsequently

At 15:36 on March 12, an explosion, thought to be a hydrogen explosion, occurred in the upper part of the reactor building. The roof, and the outer wall of the operation floor as well as the waste processing building roof, were destroyed. Radioactive materials were released into the environment during these processes, thereby increasing the radiation dose in the area surrounding the site.

According to TEPCO, the supply of 80,000 liters of fresh water ran out at around 14:53 on March 12, however it was unclear when the water injection stopped. At 17:55, in accordance with the provisions in Article 64, Paragraph 3 of the Reactor Regulation Act the Minister of Economy, Trade and Industry ordered taking action to inject seawater to fill up the RPV. TEPCO started pumping in seawater using the fire-fighting lines at 19:04 on March 12. There was confusion in the lines of communication and command between the government and TEPCO regarding this injection of seawater. Initially, it was considered that it was suspended, but TEPCO announced on May 26 that it had not been stopped and injection had in fact continued based on a decision by the Power Station Director (in order to prevent the accident from escalating, the most important thing was to keep injecting water into the reactor).

Later, on March 25, injection returned to using fresh water from the pure water tank. As of the end of May, the total amount injected was around 10,787 $m^3$ of fresh water, and around 2,842 $m^3$ of seawater, for a total of around 13,630 $m^3$. In addition, water was injected using the temporary electric pump from March 29, and on April 3 it was shifted to a stable water injection system by changing the power supply for this pump from a temporary supply to a permanent supply, and by other measures.

On April 6, the Minister of Economy, Trade and Industry directed that TEPCO provide reports on the necessity of injecting nitrogen, how it would be done, and an evaluation of effects regarding safety, based on Article 67, Paragraph 1 of the Reactor Regulation

Act. This was done as there was the possibility of hydrogen gas accumulating inside the PCV. NISA accepted TEPCO's report, dated the same day, and directed them on three points, including ensuring safety through appropriate management of parameters, etc. when carrying out the nitrogen injection. TEPCO started nitrogen injection operations on April 7 and as of the end of May is still continuing them.

To restore and enhance the power supply, TEPCO completed inspections and trial charging of the power receivers from Tohoku Electric Power Co.'s Toden Genshiryoku Line on March 16, and as of March 20 had completed electricity access at the power center, ensuring an external power supply. As of March 23, cables are being from the power center for the load needed. The connections are being established.

Main time lines are shown in Table IV-5-1. In addition, parameters for the RPV pressure etc. are shown in Figs. IV-5-1 through IV-5-3.

2) Evaluation using the Severe Accident Analysis Code

a Analysis and evaluation by TEPCO

As a result of the analysis, while it was shown that the RPV had been damaged by melted fuel, when the results of temperature measurements for the RPV were taken into account, TEPCO considered that the most of the fuel was in fact being cooled at the bottom of the RPV.

TEPCO estimated in this progress, the IC was assumed not to function following the tsunami and it was estimated that the fuel was uncovered for about three hours after the earthquake, with reactor damage starting one hour after that.

Since then there was no water being injected into the reactor, the fuel had undergone core melting, due to its decay heat, and flowed to the lower plenum, then about 15 hours after the earthquake it started to damage the RPV.

The radioactive materials contained in the fuel just before the accident were released into the RPV as the fuel was damaged and melted, and the analysis was carried out for the leakage assumed from PCV with the increase of PCV pressure, and almost all the noble gases were vented out into the environment. The ratio of released radioactive

iodine to the total iodine contained (hereinafter referred to as release ratio) was approximately 1% from the analysis result, and the release of other nuclides was less than 1%.

b NISA's cross-check

In the cross-check analysis, along with carrying out an analysis using the MELCOR code with the same conditions (basic conditions) as TEPCO used, an analysis was also performed using different conditions to those TEPCO assumed. A sensitivity analysis was carried out, such that the amount of alternative water injection was estimated by the relation of the pump discharge pressure with the RPV pressure.

The cross-check of basic conditions showed largely the same trends. At around 17:00 on March 11 (two hours after the shock), the fuel began uncovered, and the core damage started within one hour. The PCV was damaged five hours after the shock, which is earlier than that of TEPCO's analysis, and the behavior of the RPV pressure was coherent with the pressure actually measured.

As for release ratio of radioactive nuclides, the analytical results show about 1% of tellurium, about 0.7% of iodine and about 0.3% of cesium. However the release ratios are changed according to the injection flow rates of seawater, the results may be changed by operation condition because the operation condition was not cleared.

3) Evaluation of the Status of RPV, PCV, and the Equipment

a Checking plant information

Based on the plant information during the period between March 23 and May 31, when the plant was relatively stable, the status of the RPV and PCV was evaluated. Handling of the plant data during this period was considered as shown below.

The water level by the reactor fuel lowered through evaporation of water in the instrumentation piping and the condensation tank inside the PCV, the water level in which is considered the standard water level, due to the high temperatures in the PCV when it was changing under high pressure. This suggests that the reactor water level was indicating higher than normal. As a result of recovering and correcting the standard

water level for the reactor water level gauge on May 11, the water level was confirmed to have dropped below the fuel level, so it was not possible to measure the water level inside the RPV during this period either.

The RPV pressure was considered as generally showing the actual pressure as the A and B system measurements matched until around March 26. However, after that the B system showed a rising trend, and so due to the condition estimates shown in the next section the B system was removed from evaluation consideration as it was no longer matching the D/W pressure.

The RPV temperature showed different figures for each of the two water nozzle systems, but the system that was hovering around 120°C, matching the RPV pressure, was referenced as the temperature of the atmosphere in the RPV, and the data showing the higher temperatures was referenced as the metal temperature of the RPV itself.

The plant data until March 22 was handled as follows.

The reactor water levels around the fuel may have been indicating higher reactor water levels, as noted above. It was decided that water levels would not be referenced as it was not possible to judge the point at which the indications became inaccurate.

The RPV pressure was referenced as generally showing the actual pressure for the A system, as, although both the A and B system figures matched after March 17, prior to that date the A system had also been changing continuously.

It was difficult to confirm the actual changes in the D/W pressure in the PCV as the information from TEPCO was sporadic, but it was decided to assume it based on event information such as equipment operation, etc.

b Estimates of the RPV, PCV, etc. status during the relatively stable period

-Status of the RPV boundary

The amount of water injected into the RPV by May 31 was estimated at approx. 13,700 tons based on information from TEPCO, but the total amount of steam generated from the start of water injection was approx. 5,100 tons, as the water was evaluated with a

larger estimate of decay heat using the evaluation formula for decay heat. If the pressure boundary could be ensured, then at minimum there would remain a difference of approx. 8,600 tons. The capacity of the RPV, even in the larger estimates, is about 350 $m^3$, so it is thought that the injected water is evaporated in the RPV and that there was not only leakage of steam, but of liquid as well. The injection of water into the RPV was done using a feed water nozzle, and initially pooled up outside the shroud, then flowed into the bottom of the RPV through the jet pump diffusers. In regard to the question of whether the fuel has been cooled, at the present moment it is estimated that the injected cooling water is that which has leaked to the RPV bottom.

In the present state, it is thought that steam continues to escape from the gas phase part of the RPV, but the RPV pressure is higher than the D/W pressure, so it is assumed that the opening is not large. However, the pressure changes after March 23 are changing in parallel with the changes in PCV pressure, so the possibility cannot be denied that there is a problem with the measurements.

-Status of the RPV interior (reactor status, water level)

As a result of increasing the amount of water injected when the injection was changed from the feed water line on March 23 the temperature of the RPV bottom dropped from being higher than the measurable maximum (greater than 400°C), but after the injection water amount was dropped, temperatures in some areas increased, so it is thought that the fuel is inside the RPV. As a result of recovering and correcting the standard water level for the water level gauge in the reactor on May 11, it was confirmed that the water level was lower than the fuel. Therefore, at the present moment it is estimated that the fuel has melted and an considerable amount of it is lying at the bottom of the RPV. However, the bottom of the RPV is damaged, and it is thought at the present stage it is possible that some of the fuel has fallen through and accumulated on the D/W floor (lower pedestal).

The temperature of part of the RPV (the feed water nozzles, etc.) is higher than the saturation temperature for the PRV pressure, so at the present stage it is estimated that part of the fuel is not submerged in water, but is being cooled by steam.

-PCV status

On March 12 the D/W pressure reached its highest level of approx. 0.7 MPag, exceeding the PCV maximum working pressure (0.427 MPag), and on March 23 the D/W temperature exceeded the measurable maximum (greater than 400°C). From these and other issues it is estimated at the present stage that the functions of the gasket on the flange section and the seal on the penetrating section have weakened. The inclusion of nitrogen, which started on April 7, was measured to increase the pressure by approx. 0.05 MPa, so at that stage it was estimated that the leakage rate from the D/W was approx. 4%/h. No major changes have been confirmed in the PCV status since then.

Up until the inclusion of nitrogen on April 7, the D/W pressure and the S/C pressure were almost the same, and the S/C pressure dropped from being 5 kPa higher than the D/W pressure to being the same pressure several times up until April 3.Therefore, at the present stage it is estimated that the vent pipes and the vacuum breakers between the D/W and the S/C were not submerged. At present, TEPCO is continuing with its considerations in order to estimate the water level in the D/W.

While the S/C pressure dropped after March 23, once it briefly reached approx. 0.3 MPag, a positive pressure state was measured for some time, and at the present stage it is estimated that there is no major damage to the S/C.

4) Estimation of the conditions of the RPV, PCV, and other components during times that variation with time was apparent

The basic means of cooling the reactor after the MSIV is closed are cooling via the IC and water injection via the HPCI. However, there were few records of the operating conditions of these systems following arrival of the tsunami. Furthermore, the radiation dose rose in the turbine building at around 23:00 on March 11 and there was an unusual rise in pressure in the PCV at around 0:49 on March 12. Therefore, these conditions suggest that the RPV had been damaged before 23:00 on March 11 to increase the pressure and temperature of the PCV significantly, which led to the leakage from the PCV. Similarly, the information, written on the whiteboard in the central control room, of the increased indication of the radiation monitor when the outer air lock was put on at 17:50 on March 11 suggest that core damage was then starting. Analysis is required from here on to confirm the degree to which IC and HPCI were functioning that includes detailed investigation and analysis of the conditions of each component.

Although alternative water injection was commenced at 5:46 on March 12, the RPV water level reading dropped at around 7:00 and has yet to recover. Due to poor reliability of the water gauge, analysis is required from here on by detailed investigation and analysis that covers the relationship between the water injection operations and the following pressure behavior.

As the D/W pressure in the PCV showed a tendency towards dropping slightly at around 6:00 on March 12 prior to wet vent operations, it is possible that there was a leak in the PCV. A drop in D/W pressure was also likely to have occurred after a temporary air compressor was installed to drive the pneumatic valves (AO valves) and wet vent operations were carried out at around 14:00 on March 12. However, when D/W pressure measurement recommenced at around 14:00 on March 13, the pressure has risen to 0.6 MPag and the PCV vent line had closed due to an unknown cause. Emissions may have restarted at 18:00 when pressure started dropping again.

On March 13, RPV pressure dropped to 0.5 MPag and reversed position with D/W pressure. However, detailed examinations cannot be conducted due to lack in data of both pressures.

5) Evaluation of accident event development

Regarding development of the Unit 1 accident event, from analyses conducted to date, it is likely that the IC stopped working when the tsunami hit, causing damage to the reactor from early on, and that by the time when the injection of sea water started into the reactor, the core had melted and moved to the bottom of the RPV.

From the balance of the amount of water injected and the volume of vapor generated from decay heat, it is likely that the water injected into the RPV was leaking.

Considering the results of RPV temperature measurements, it is likely that a considerable amount of the fuel cooled in the bottom of the RPV.

Concrete details of the explosion in the reactor building are unclear due to constraints in checking conditions inside the building. In addition to severe accident analysis, numerical fluid dynamics analysis was also carried out. Results of these analyses showed likelihood that gasses including hydrogen produced from a reaction inside the reactor between water

and zirconium of the fuel cladding were released via leaks in the RPV and PCV, so that only hydrogen that reached the detonation zone accumulated in the space in the top of the reactor building and caused the explosion. In the waste processing building, in addition to damage caused by the blast, it is possible that there was an inflow of hydrogen via the part through which the piping runs.

At this point, the degree to which individual equipment was actually functioning is unclear, so that it is also impossible to determine the status of progress of the event. However, the results of the severe accident analysis suggests that the radioactive materials emitted to the environment by the leakage and the subsequent wet vent from the PCV on the dawn of March 12. It is currently estimated that at that time, most of the noble gases in the content within the reactors, about 0.7% of the total radioactive iodine, and about 0.3% of the total cesium were emitted.

Table IV-5-1 Fukushima Daiichi NPS, Unit 1 – Main Chronology (Provisional)

* The information included in the table is subject to modifications following later verification. The table was established based on the information provided by TEPCO, but it may include unreliable information due to tangled process of collecting information amid the emergency response. As for the view of the Government of Japan, it is expressed in the body text of the report.

| | Unit 1 | |
|---|---|---|
| | Situation before the earthquake: operating | |
| 3/11 | 14:46 | Reactor SCRAM (large earthquake acceleration) |
| | 14:47 | All control rods were fully inserted. |
| | | turbine trip |
| | | loss of external power supply |
| | | emergency diesel generator (emergency DG) start-up |
| | | main steam isolation valve (MSIV) close |
| | 14:52 | emergency condenser (IC) automatic start-up |
| | around | IC shutdown |
| | 15:03 | and repeatedly reactuated until around 15:30 (reactor pressure was controlled by IC) |
| | 15:07 - | reactor containment spray system pumps were started up to cool the suppression chamber (S/C). |
| | 15:10 | |
| | 15:37 | all AC power supplies lost |
| | 15:42 | TEPCO determined that notification event according to NEPA Article 10 (loss of all AC power supplies) had occurred. |
| | 16:36 | TEPCO, believing that it became impossible to inject water using the emergency core cooling system, determined that the event according to NEPA Article 15 had occurred. |
| | 18:18 | Opening operation was performed on IC (A) system supplying piping isolation valve MO-2A and return piping isolation valve MO-3A/steam generation was observed. |
| | 18:25 | IC (A) system MO-3A valve was closed. |
| | 20:30 | Main control room was lit (temporary facility secured) |
| | 21:19 | Line-up from diesel-driven fire pump (D/D FP) to IC was performed. |
| | 21:30 | IC 3A valve was opened/steam generation was observed. |
| | 21:35 | being supplied from D/D FP to IC. |
| | 22:00 | reactor water level: effective fuel top (TAF)+550 mm |
| | 23:00 | Radiation dosage is rising in the turbine building. (North side of the ground floor of turbine building 1.2 mSv/h. South side of the ground floor of turbine building 0.5 mSv/h.) |
| 3/12 | 0:30 | Water is being supplied to IC (A) body side by fire extinguishing system. |
| | 0:49 | Since there was a possibility that dry well (D/W) pressure level (maximum operating pressure in terms of design: 427 kPa gage) exceeded 600 kPa, TEPCO determined that the event according to NEPA Article 15 (abnormal rise in containment vessel pressure level) had occurred. |
| | 1:48 | D/D FP is checked and it is found that supply is shut down by pump trouble, not by running out of fuel. |
| | 2:30 | D/W pressure 0.84 MPa (840 kPa) reactor water level TAF+1,300 mm (fuel region A), reactor water level TAF+530 mm (fuel region B) |
| | 4:15 | D/W pressure 840 KPa |
| | 5:09 | D/W pressure 770 KPa |
| | 5:14 | From the rise of radiation level on site and also from a decreasing tendency of D/W pressure, TEPCO determined that radioactive material is leaking. |
| | 5:46 | Fresh water injection by fire pumps was started. |
| | 6:30 | 2000 litters of fresh water had been injected. By (1000 litters/injection) fire engine, water was injected from the core spray (CS) system through the D/D FP line. |
| | 7:55 | Reactor water level decreased to 200 mm from TAF-100 (fuel region level instrument A) and 200 mm from TAF-100 (fuel region level instrument B). |
| | 7:55 | 3000 litters of water (cumulative) had been injected through the FP line by fire engines. |
| | 8:30 | 5000 litters of water (cumulative) had been injected through the FP line by fire engines. |
| | 9:04 | Workers left for the site for pressure venting. |
| | 9:15 | 6000 litters of water (cumulative) had been injected through the FP line by fire engines. |
| | around 9:15 | Suppression chamber vent line motor-operated (MO) valve was manually opened (25%). |
| | around 9:30 | On site operation on the suppression chamber vent line air-operated (AO; second valve) valve was attempted but given up because of its too high radioactive dosage. |
| | 9:40 | 21000 litters of water (cumulative) had been injected through the FP line by fire engines. |
| | 10:17 | Operation to open the second valve (AO valve) was performed in the main control room through remote control. |
| | 12:55 | Reactor water level: fuel region A-1700 mm, fuel region B-1500 mm, D/W pressure: 750 KPa |
| | around 14:00 | Additional operation for the second valve (AO valve) (using air compressor). |
| | 14:30 | Pressure decrease in the containment by venting was observed. |
| | 14:53 | Fire engines completed injection of 80,000 liters of water (cumulative) using FP lines. |
| | around 15:36: | What was considered as a hydrogen explosion occurred in the upper part of the reactor building (Relatively strong "shake" was sensed, and around 15:40, smoke rising was observed near Unit 1). |
| | 19:04 | Injection of sea water (without boric acid) into the reactor was started. |
| | 20:45 | Injection of boric acid was started to prevent the reactor from going critical again. |
| 3/13 | 3:38 | Sea water was being injected by using the fire extinguishing line. |

| | Unit 1 | |
|---|---|---|
| | Situation before the earthquake: operating | |
| 3/14 | 1:10 | Sea water injection was suspended because the remaining amount of sea water being supplied to the reactor became small. (As of 23:30, sea water was being injected into the reactor.) |
| 3/15 | | |
| 3/16 | | |
| 3/17 | | |
| 3/18 | | |
| 3/19 | | |
| 3/20 | 15:46 | 480 V emergency low-voltage switchboard (power center (P/C) 2C) received power.<br>A temporary power supply was supplied from Tohoku nuclear power line. |
| 3/21 | | |
| 3/22 | | |
| 3/23 | 1:40<br>2:33 | Main bus panel for measuring received power 120 VAC<br>In addition to the sea water injection from fire pumps using fire-extinguishing systems, water (sea water) injection from outside through the water supply system was started to add to the injection water. |
| 3/24 | around 11:30<br>17:10 | Main control room lighting recovered.<br>Transfer of the accumulated water from the turbine building (T/B) basement to the hot well (H/W) began. |
| 3/25 | 15:37 | The water injected into the reactor by fire pumps was switched from sea water to fresh water. |
| 3/26 | | |
| 3/27 | | |
| 3/28 | | |
| 3/29 | 8:32<br>17:30<br>(22:03) | For water injection into the reactor, the fire pumps were replaced with temporary motor pump.<br>Transfer of the accumulated water from T/B to H/W was completed.<br>Residual water in a trench was analyzed and radioactivity was detected. |
| 3/30 | | |
| 3/31 | 9:20<br>11:25<br>12:00<br>13:03<br>14:24<br>15:25<br>16:04 | Transfer of the accumulated water from the trench to the central radioactive waste treatment facility (central R/W) pellet pool began.<br>Transfer of the accumulated water from the trench to central R/W pellet pool was completed.<br>Transfer of the accumulated water from condensate storage tank (CST) to the suppression pool water surge tank (SPT) began.<br>For cooling spent fuel pool, spraying (fresh water) by using Tokyo Electric Company's concrete pump truck was started.<br>Transfer of the accumulated water from CST to SPT was completed.<br>Transfer of the accumulated water from CST to SPT was started.<br>For cooling spent fuel pool, spraying (fresh water) by using Tokyo Electric Company's concrete pump truck was finished. About 90 t of water was injected. |
| 4/1 | | |
| 4/2 | 15:26<br>17:16<br>17:19 | Transfer of the accumulated water from CST to SPT was completed.<br>For cooling spent fuel pool, spraying was started by using Tokyo Electric Company's concrete pump truck to check the spraying position.<br>For cooling spent fuel pool, spraying was completed by using Tokyo Electric Company's concrete pump truck to check the spraying position. |
| 4/3 | 11:50<br>13:55 | For water injection into the reactor, the power supply to the temporary motor pump was switched from the temporary power supply to the permanent power supply.<br>Transfer of the accumulated water from H/W to CST was started. |
| 4/4 | | |
| 4/5 | | |
| 4/6 | | |
| 4/7 | 1:31 | Nitrogen gas injection was started. |
| 4/8 | | |
| 4/9 | 3:29 | For the nitrogen gas injection, all valves were temporarily closed and the operation to switch to the high purity nitrogen gas generator was started.<br>→03:59 operation to open the injection valve was started.<br>→04:10 Nitrogen injection to the containment vessel was switched to the high purity nitrogen generating measures (all valves were opened). |
| 4/10 | 9:30 | Transfer of the accumulated water from H/W to CST was completed. |
| 4/11 | around<br>17:16<br>around<br>17:16<br>17:56<br>18:04<br>23:34 | Due to the earthquake, external power supplies to Unit 1 and Unit 2 (Tohoku Electric Power Line) was shut down, and the reactor injection pump was shut down.<br>Due to the earthquake, nitrogen injection suspended.<br>External power supply recovered.<br>The reactor injection pump was reactivated.<br>Nitrogen injection into the reactor containment was resumed. |
| 4/12 | 14:51 | It was confirmed that the nitrogen gas injection device had been working without any problem after the earthquake. |
| 4/13 | | |
| 4/14 | 7:45<br>12:20 | Installation of silt fences to the front surface and curtain wall of Unit 1 and Unit 2 was started to prevent the diffusion of contaminated water.<br>Installation of silt fences to the front surface and curtain wall of Unit 1 and Unit 2 was completed to prevent the diffusion of contaminated water. |

| | Unit 1 | |
|---|---|---|
| | Situation before the earthquake: operating | |
| 4/15 | 10:19 | Transfer of power distribution panels and the like for injection pump of the reactor to upland as measures against tsunami was started. |
| | | Transfer of power distribution panels and the like for injection pump of the reactor to upland as measures against tsunami was completed. |
| 4/16 | | |
| 4/17 | 11:30<br>around 17:30 | In the reactor building, atmosphere investigation by using an unmanned robot was started.<br>In the reactor building, atmosphere investigation by using an unmanned robot was completed. |
| 4/18 | 11:50<br>12:12 | Replacement of the hoses used for reactor injection with new ones was started. The injection pumps were stopped.<br>Replacement of the hoses used for reactor injection with new ones was finished. Injection pump operation. |
| 4/19 | 10:23 | Nos. 1,2 - 3,4 power tie line had been laid.<br>(both Tohoku Electric Power Line - Okuma Line can be used to each other.) |
| 4/20 | | |
| 4/21 | | |
| 4/22 | | |
| 4/23 | | |
| 4/24 | | |
| 4/25 | 14:10<br>14:44<br>17:38<br>18:25<br>19:10 | For power supply enhancement, the nitrogen injection device was shut down.<br>In association with the power supply enhancement (tie up Nos. 1, 2 - 5, 6 with each other), shutdown operation of Nos. 1, 2 power supply panel for 6,9 kV was started.<br>In association with the power supply enhancement (tie up Nos. 1, 2 - 5, 6 with each other), shutdown operation of Nos. 1, 2 power supply panel for 6,9 kV was finished.<br>The reactor injection pump recovered its state of using external power supply.<br>The shut down nitrogen injection device was restarted. |
| 4/26 | 11:35<br>around 13:24 | Atmosphere investigation (for radiation dosage, leakage, and the like) by using an unmanned robot was started on the reactor building.<br>Atmosphere investigation (for radiation dosage, leakage, and the like) by using an unmanned robot was finished on the reactor building. |
| 4/27 | 10:02 | In order to examine the injection volume sufficient to flood the fuel in the reactor, operation of gradually changing the reactor injection volume from about 6 $m^3$/h to the maximum about 14 $m^3$/h was started. |
| 4/28 | | |
| 4/29 | 10:14 | Injection into the reactor was kept from 4/27 by the volume of 10 $m^3$/h, but the volume was returned to the originally planned 6 $m^3$/h. |
| 4/30 | | |
| 5/1 | | |
| 5/2 | 12:58<br>14:53 | In association with installation of an alarm device to the core injection pump, the core injection pump was switched to fire pumps.<br>As the installation of the alarm device to the core injection pump was finished, the fire pumps were switched back to the core injection pump. |
| 5/3 | | |
| 5/4 | | |
| 5/5 | 16:36 | In order to improve the environment of the reactor building, local exhausters were installed, and then the operation of all exhausters was started. |
| 5/6 | 10:01 | In order to flood the reactor vessel, the injection volume to the reactor was increased from about 6 $m^3$/h to about 8 $m^3$/h. |
| 5/7 | | |
| 5/8 | 20:08 | A duct built through the double-entry door of the reactor building was cut. |
| 5/9 | 4:17 | The double-entry door of the reactor building was fully opened. |
| 5/10 | | |
| 5/11 | 8:47<br>8:50<br>15:55<br>15:58 | The power supply to the reactor injection pump was switched to a temporary diesel generator, and injection was performed.<br>As Okuma line No. 2 line was restored, part of the reactor power supply was shut down and the nitrogen gas supplying equipment was shut down.<br>The power supply to the reactor injection pump was switched from the temporary diesel generator to the reactor power supply.<br>In association with the restoration of Okuma line No. 2 line, the shutdown operation of part of the reactor power supply finished, and then the nitrogen gas supplying equipment was reactivated. |
| 5/12 | | |
| 5/13 | 16:04<br>19:04 | Spraying (fresh water) on the spent fuel pool by Tokyo Electric Company's concrete pump truck and the checking the spraying position were started.<br>Spraying (fresh water) on the spent fuel pool by Tokyo Electric Company's concrete pump truck and the checking the spraying position were completed. |
| 5/14 | 15:07 | Spraying (fresh water) was started on the spent fuel pool by Tokyo Electric Company's concrete pump truck. |
| | 15:18 | Spraying (fresh water) was finished on the spent fuel pool by Tokyo Electric Company's concrete pump truck. |
| 5/15 | | |
| 5/16 | | |

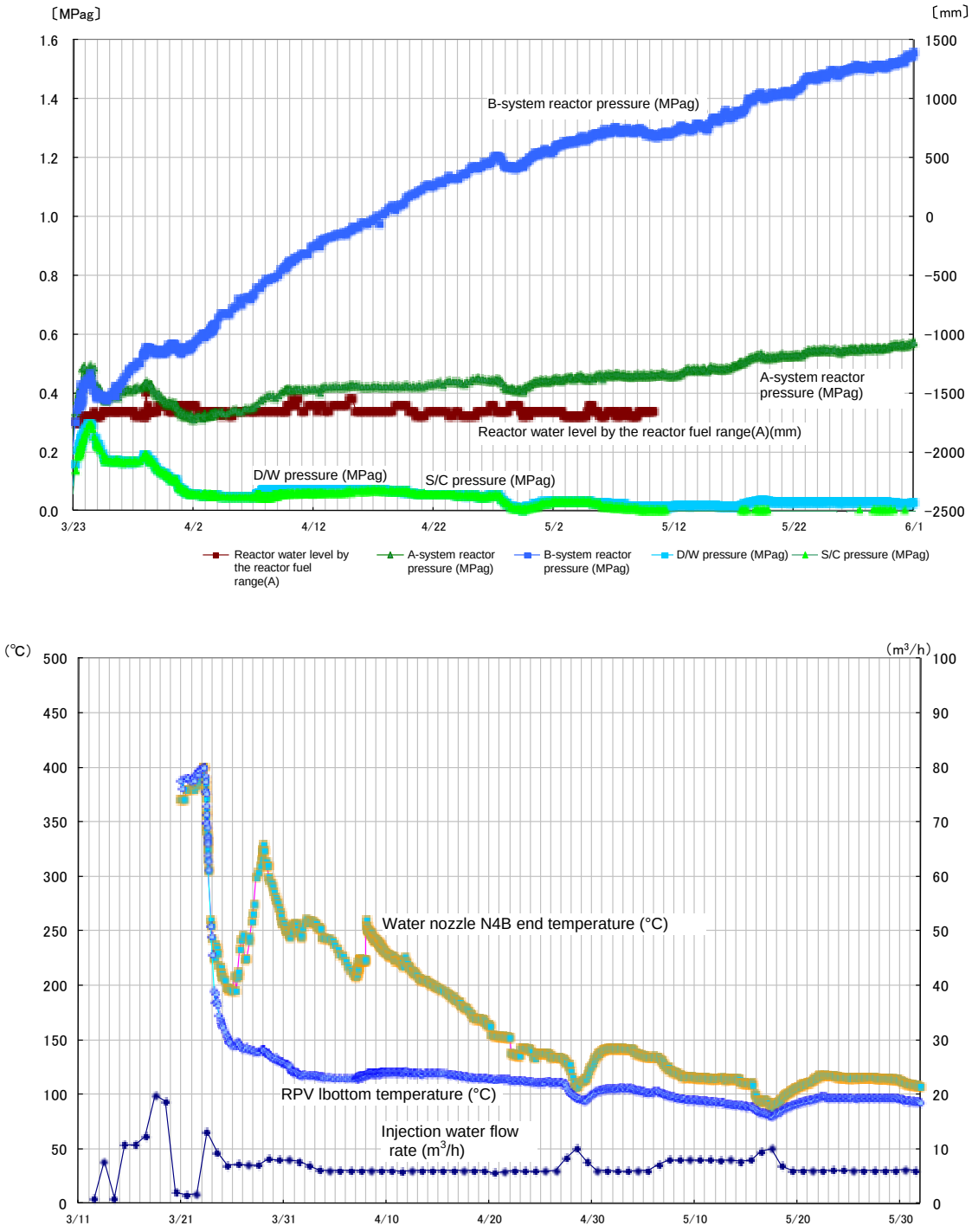


Figure IV-5-1 Changes in major parameters [1F-1] (From March 11 to May 31)

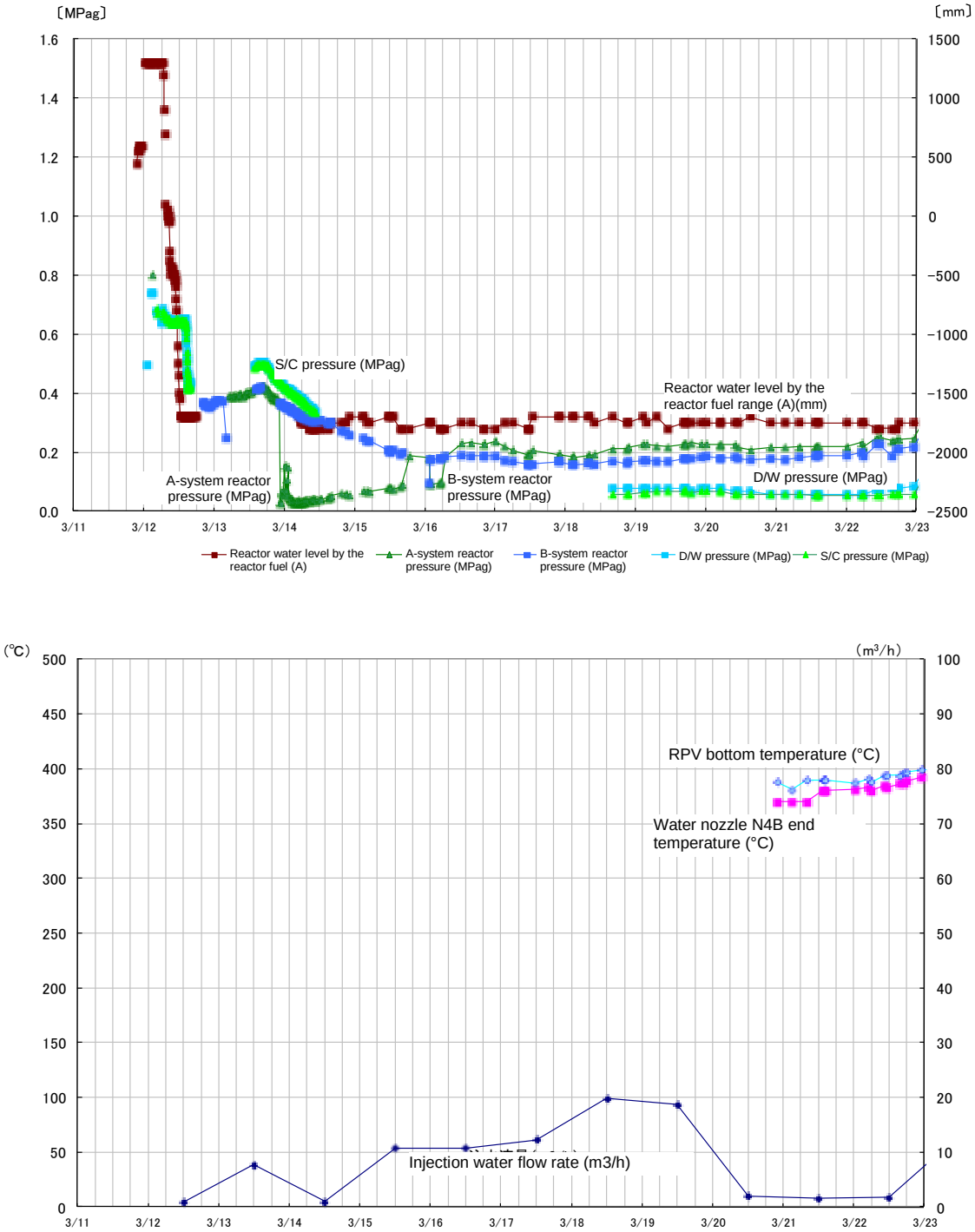


Figure IV-5-2 Changes in major parameters [1F-1] (From March 11 to March 23)

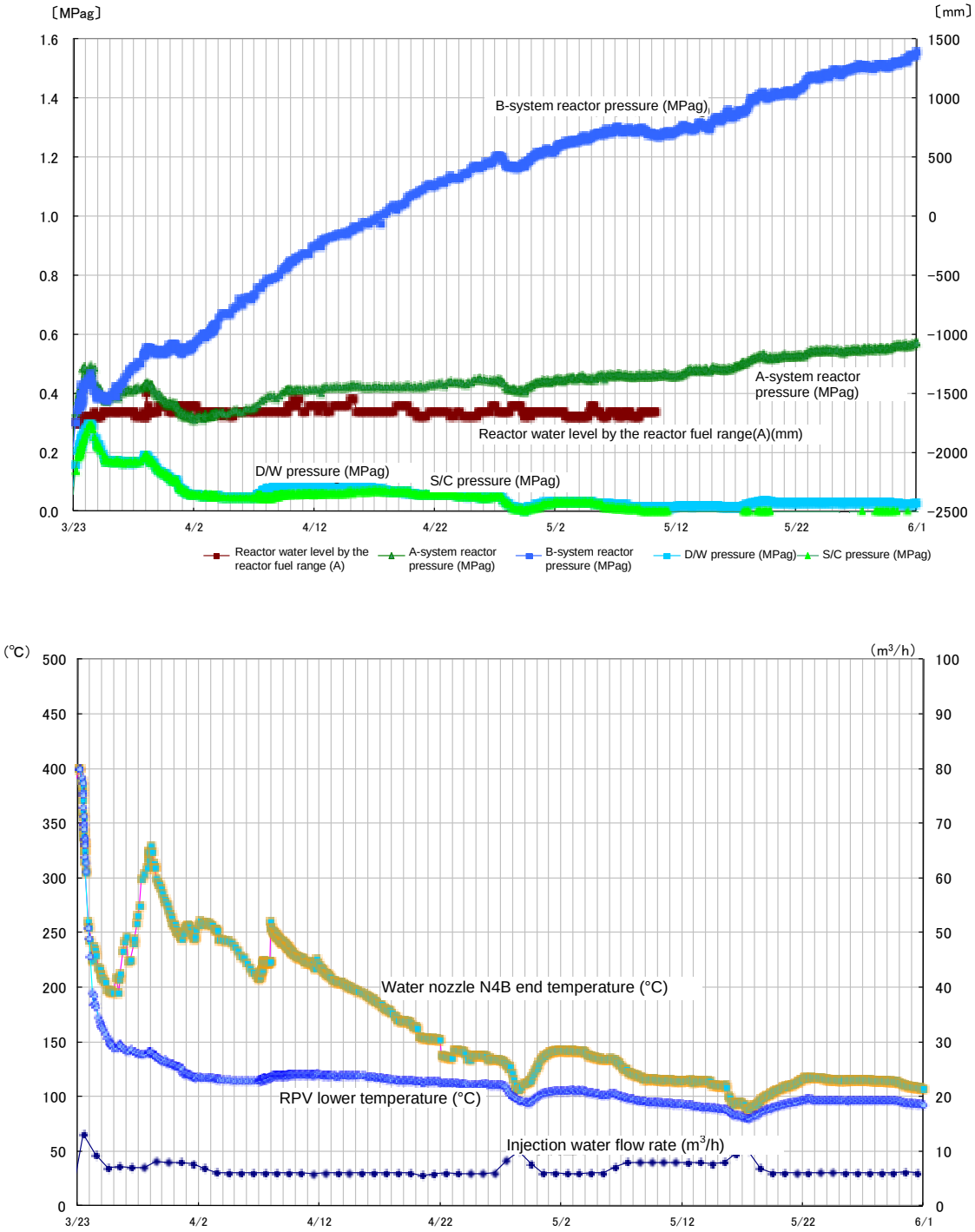


Figure IV-5-3 Changes in major parameters [1F-1] (From March 23 to May 31)

(2) Fukushima Daiichi NPS Unit 2

1) Chronological arrangement of accident event progress and emergency measures

a Between the earthquake occurrence and invasion of the tsunami

As noted in number 3 of this chapter, steady operation of rated thermal power was being carried out prior to the earthquake. At 14:47 on March 11 following the earthquake occurrence, scram (automatic shutdown) was achieved due to large earthquake acceleration. At the same time, all control rods were fully inserted, the reactor became sub-critical and normal automatic shut down was achieved. The external power supply was lost as a result of the earthquake, due to damage incurred to the receiving circuit breakers of the station at the Okuma No. 1 and No. 2 power transmission line. This resulted in automatic startup of the two emergency DGs.

At 14:47, the instrumentation lost power as a result of loss of external power supply, activating the MSIV closure signal as a fail-safe and causing the MSIV to close. Regarding closure of the MSIV, TEPCO determined that there was no rupture of the main steam piping, as we could not verify an increase in steam flow from the transient recorder records that would be have been observed if the main steam piping had ruptured. NISA considered this judgment reasonable.

Closure of the MSIV led to a rise in RPV pressure. In accordance with the Procedures, the RCIC was activated manually, but shut down at 14:51 due to a high reactor water level. This led to a drop in the water level, but the RCIC was again manually activated at 15:02 causing a rise in the water level. A high reactor water level was achieved at 15:28 causing the reactor RCIC to shut down automatically. The RCIC was again manually activated at 15:39.

Between 22:00 on March 11 and 12:00 on March 14, the reactor water level reading (fuel range) remained stable at a level (+3000 mm or more) which maintained sufficient depth from the Top of Active Fuel (hereinafter referred to as TAF).

Reactor pressure was controlled by closing and opening of the SRV.

As operation of the SRV and RCIC led to a rise in the S/C temperature, the RHR pumps

were started in succession from 15:00 to 15:07 to cool the S/C water. This is verified by suppression of the temperature rise from around 15:00 to around 15:20 on the same day as shown in the temperature chart of the S/C.

There are no records of operation of any emergency core cooling equipment aside from the activation of the RHR pumps to cool the S/C until the occurrence of the station blackout. This was likely because the reactor water level did not drop to the point (l-2) at which other equipment is automatically activated, and TEPCO state that they did not activate such equipment manually.

b Impact from the tsunami

The abovementioned S/C then showed a tendency towards a rise in temperature from 15:30, and the RHR pumps were successively shut down from around 15:36. This is thought to be due to a loss in functioning caused by the tsunami. At this time, the Unit was affected by the tsunami, the two emergency DGs stopped operating due to flooding and submergence of the seawater pump for cooling, the power distribution panel, and the emergency bus bar, and a station blackout was resulted.

Furthermore, information on parameters could not be verified due to a loss in direct electrical current functionality.

Loss in functionality of the RHR sea water pump led to a loss in RHR functionality, and the decay heat could not be transferred to the sea water that acted as the final heat sink.

c Emergency measures

At 22:00 on March 11, observation of the reactor water level was achieved. As of the day, it is presumed that the water injection was achieved by the RCIC since the water level was observed stable. However, reactor pressure is slightly lower than rated, at 6 MPa.

From 4:20 to 5:00 on March 12, as condensate storage tank water level decreased and in order to control the S/C water level increase, the water source for the RCIC was switched from the condensate storage tank to the S/C so that the RCIC could continue injecting water. The reactor water level remained stable at a level which maintained sufficient depth from the TAF by 11:30 on March 14. From that point until 13:25 on

March 14, the reactor water level began to drop, at which point the RCIC was judged to have shut down. The level dropped to 0 mm (TAF) at 16:20 on the same day. In relation to this, TEPCO verified on-site that the RCIC was operating at 02:55 on March 12, and that the RCIC water source had switched from the condensate storage tank to the S/C, and through such measures among others, the RCIC was functioning by around 12:00 on March 14 to stabilize the reactor water level. TEPCO determined that there may have been a loss in reactor cooling functionality at 13:25 on the same day and made a notification pursuant to the provisions of Article 15 of NEPA.

The RCIC is steam-driven, but the valves were operated through direct electrical currents. Although the time of RCIC functionality loss determined by TEPCO is more than 30 hours after operation start-up, given the actual constraints of battery capacity, it follows that functionality was maintained even after the battery run out.

SRV opening operations and alternative water injection operations commenced at 16:34 on March 14, and a drop in reactor pressure was confirmed at around 18:00. At this time, the reactor water level also dropped. After that point, reactor pressure began to show a tendency towards rising, which is presumed to have caused the SRV to close due to problems in the air pressure used to drive the air operated valves (AOVs) and other problems. At 19:54 on March 14, the seawater injection into the reactor using fire engines was started. Water injection was therefore suspended for six hours and 29 minutes since 13:25 when the RCIC lost functionality.

With regard to PCV vent operations to reduce pressure in the PCV, at 06:50 on March 12, TEPCO was ordered by the Minister of Economy, Trade and Industry in accordance with Article 64, Paragraph 3 of the Reactor Regulation Act to contain the PCV pressure. Based on this order, TEPCO began PCV vent operations, carrying out operations at 11:00 on March 13 and 00:00 on March 15, but a decrease in D/W pressure could not be verified.

d Explosion and actions taken afterword

At around 6:00 on March 15, the sound of an impact was heard which was considered to have resulted from a hydrogen explosion. No visible damage was observed at the reactor building, but it was confirmed that the roof of the waste processing building which is neighboring to the reactor building was damaged. During these processes, radioactive

material to be released into the environment, and as a result, the radiation dosage around the premises increased.

At 10:30 on March 15, based on Article 64, Paragraph 3 of the Reactor Regulation Act, the Minister of Economy, Trade and Industry directed TEPCO to inject water into the reactor of Unit 2 as soon as possible and carry out a dry vent as it necessitates.

With regard to the alternate water injection system, until March 26, sea water was injected into the reactor, but from March 26, fresh water was injected from a temporary tank. From March 27, the fire pumps were replaced by temporary motor-driven pumps, and from April 3, the temporary power source was replaced by an external power source to ensure the stable injection of water. The total amount of water injected as of May end was approx. 20,991 $m^3$ (fresh water; approx. 11,793 $m^3$, sea water: approx. 9,197 $m^3$).

With regard to recovery and reinforcement of the power supply, TEPCO completed checking and the trial energizing of the facilities to receive power from the nuclear power line of Tohoku Electric Power Co., Inc. on March 16. From March 20, the Power Center received power to ensure the power supply from an external power source. On March 26, lighting in the Main Control Room was restored, and power was connected while the load soundness was being checked.

In Table IV-5-2, these major events are arranged in a time-sequences with more details. Figs. IV-5-4 to 5-6 show the plant data such as RPV pressure.

2) Assessment using severe accident analysis codes

a Analysis by TEPCO

Results of the analysis by TEPCO show that when alternate injection water flow is small, RPV will be damaged due to the fuel melting. TEPCO assessed that considering the above results and the measured RPV temperature data obtained to date, that most of the fuel actually cooled at the RPV bottom.

TEPCO judged that during this time, although RCIC operation was continued, water leakage from RPV was presumed to have occurred, based on PCV pressure behavior, that this leakage caused the RCIC to shut down. TEPCO supposed that the fuel was

uncovered for five hours from 13:25 on March 14 (75 hours after the Earthquake began) and that the core damage started two hours later. After that, assuming there was an outflow of alternate injection water due to insufficient maintenance of the reactor water level in the fuel region, the core likely melted, and the melted fuel moved to the lower plenum so that the RPV was damaged 109 hours after the Earthquake began.

The leakage of radioactivity was analyzed assuming that the radioactivity contained in the fuel was released to RPV after fuel collapse and melting and that it leaked to the PCV. It is estimated that nearly all the noble gas was released to environment, and the release rates of iodine and other nuclides are less than about 1%.

b Cross check analysis by NISA

In the cross check analysis, NISA conducted analysis using MELCOR codes with the conditions that TEPCO analyzed (base case) and sensitivity analysis as a function of the injected water volume assuming the volume varies with RPV pressure in relation to the pump discharge pressure.

In the cross check analysis of the base case, the results were roughly similar to TEPCO's results. At 18:00 on March 14 (75 hours after the Earthquake began), the fuel uncovering began, and core damage commenced within two hours. RPV time in the cross check analysis was earlier than the time given in the TEPCO analysis, and was about five hours after the Earthquake began, and the PCV pressure behavior results are consistent with measured data.

Results showed the release rate of radioactive materials to be about 0.4% to 7% for iodine nuclides, about 0.4% to 3% for tellurium nuclides, and about 0.3% to 6% for cesium nuclides. Release rates may change with operating conditions, as release rates vary with the sea water flow rate and the set operating conditions are unclear.

3) Evaluation of the conditions of the RPV, PCV, etc.

a Verification of plant data

First, the following studies the plant data from March 17 to May 31, during which the plant was relatively stable. Interpretation of plant data during this period is as follows:

With regard to the reactor water level around the reactor fuel, when the PCV pressure remained high, the PCV temperature was high. As a result, the water in the condensation tank and instrumentation piping in the PCV, whose water level is used as a reference water level, evaporated, causing the reference water level to drop. This may have caused the indicated reactor water level to be higher than the actual reactor water level. Since then, the reactor water level showed the same trend as that of Unit 1, and therefore, it was determined that during this period, the water level in the RPV was not measured properly.

The measured RPV pressure in system A was consistent with that in system B, and it was determined that the indicated pressure was mostly correct. For the period during which negative pressure was indicated, the pressure was out of the measurable range of the pressure meter and determined to be not measured properly.

Since March 27, the RPV temperature trend has been consistent with the amount of water injected, and it was determined that the indicated temperature was roughly correct. However, some data shows the temperature was kept constant, which is not consistent with other readings. Therefore, such data is not used for evaluation.

With regard to the interpretation of plant data up to March 17, especially from March 14 to 15, the data fluctuated significantly, and could not be used for numerical values. The data was used as a reference for the rough understanding of fluctuations, along with event information such as the operation of equipment.

b Presumed condition of the RPV, PCV, etc. when they were relatively stable

-RPV boundary condition

TEPCO estimated the amount of water injected into the RPV until May 31 to be 21,000 tons, but the amount of steam generated since the injection of water began was estimated to be about 7,900 tons although it was estimated by the decay heat evaluation method and the amount of decay heat was estimated to be a little larger than the actual amount. If the pressure boundary remains undamaged, at least about 13,100 tons of water should remain in the RPV. The volume of the RPV is estimated to be less than 500 $m^3$. Therefore, the injected water vaporized inside the RPV. In addition to the leakage of steam, liquid is also suspected of leaking. Water was injected into the RPV through the

recirculation water inlet nozzle, and flowed to the bottom of the RPV via the jet pump diffuser. Judging from the fact that the reactor fuel was kept cool, at this point, it is presumed that the injected water had leaked from the bottom of the RPV.

From May 29 to May 30, water was injected through the recirculation water inlet nozzle and, in addition, water was injected through the feed-water nozzle. From around 17:00 on May 30, water was injected through the feed-water nozzle only.

Since March 16, the RPV pressure has been kept around the atmospheric pressure, and equal to the D/W pressure of the PCV. At this point, it is presumed that the RPV has been connected to the PCV in the vapor phase area.

-Condition of the inside of the RPV (core condition and water level)

Since March 20 the RPV temperature has been measured when the amount of water injected increased. During most of the period after the start of measurements, the temperature was stable at around 100°C, and during most of the period after March 29 when the amount of water injected was decreased, the RPV temperature was around 150°C. Accordingly, at this point, it is presumed that a significant amount of the fuel remained in the RPV. However, it cannot be denied that the bottom of the RPV was damaged and part of the fuel dropped and accumulated on the D/W floor (lower pedestal).

Judging from the fact that the temperature in some part of the RPV is higher than the saturated temperature in relation to the RPV pressure, it is presumed that part of the fuel was not submerged and cooled by steam.

-PCV condition

On March 15, the D/W pressure exceeded the maximum useable pressure of the PCV (0.427 MPag) and increased to about 0.6 MPag. Accordingly, at this point, it is presumed that the sealing performance deteriorated at the gaskets of the flanges and the penetration parts. The D/W pressure is kept at around the atmospheric pressure (0 MPag) and it is presumed that the steam generated by decay heat is being released from D/W into the outside environment through these deteriorated parts.

Because, most of the time, the S/C pressure is not measured, at this point, it was difficult to estimate the condition of the inside of the S/C and the water level in the D/W based on the plant data. However, judging from the fact that high levels of contaminated water were found in the turbine building, at this point, it was presumed that the water injected into the RPV was leaking from the RPV through the PCV. Currently, TEPCO is studying how to estimate the water level in the D/W.

4) Presumption of the condition of the RPV, PCV, etc. as it changed with time

According to TEPCO, early on March 12, the water source was switched to the S/C and the injection of water continued by the reactor core isolation cooling system (RCIC). On the morning of May 14, the water level was above the Top of Active Fuel (TAF). Accordingly, at this point, it was presumed that at least until then, the RCIC had functioned properly. It is also presumed that because the steam for driving the turbine of the RCIC was continuously released into the S/C gas phase on the morning of March 12, the S/C pressure increased, the steam flowed from the S/C into the D/W, and at around 12:00 on March 12, the D/W pressure increased.

On the morning of March 14, the RPV pressure increased and the reactor water level dropped presumably because the RCIC malfunctioned, and the RPV pressure was about 7.4 MPag. Accordingly, it is presumed that the reactor water level further dropped after the SRV was activated. A report was received that the PCV was vented before that, but during part of the time, the PCV pressure did not decrease. There is a possibility that the RCIC did not fulfill its required function. To know to what extent the RCIC functioned, it is necessary to closely examine and analyze the condition of each component.

At around 0:00 on March 15, the S/C pressure did not increase but the D/W pressure increased, and after that, there had been a significant difference between the D/W pressure and S/C pressure for a long time and they had been inconsistent with each other. It is unknown why this happened.

In addition to these presumptions, the water level did not return to normal, and at around 0:00 on March 15, the readings on the PCV atmosphere monitoring system (hereinafter referred to as CAMS) for the D/W and S/C increased by three to four digits. Accordingly, it is presumed that the fuel was damaged at this time. In addition, TEPCO reported that from late afternoon on March 14, water was injected by fire trucks, but the water level

did not rise, and there is a possibility that they did not fulfill their required function because of the reactor pressure. To know what extent they functioned, it is necessary to closely examine and analyze the condition of each component.

5) Event development analysis and summarization of the events based on the presumptions of the condition of the RPV, PCV, etc.

With regard to accident event progress in Unit 2, analyses carried out to date suggest that the loss in RCIC functionality caused damage to the reactor core, and that water injection may not have been sufficient as injection of seawater commenced at a time of high pressure in the reactor. As a result, insufficient cooling may have caused melting of the reactor core, and the melted fuel, etc, to transfer to the bottom of the RPV.

Considering the balance of volume of injected water and volume of steam generated from decay heat, it is presumed that the water injected into the RPV is leaking.

Considering the results of RPV temperature measurement, a significant amount of fuel is thought to have cooled in the bottom of the RPV.

With regard to the sounds of an impact around the S/C, we cannot say anything for sure because we are limited in checking the site where the explosion was heard. In addition to severe accident analysis, we conducted numerical fluid dynamics analysis, and at this point, it is presumed that in the reactor, the hydrogen generated when zirconium used in the fuel cladding reacted with water flowing into the S/C when the SRV was opened, leaked from the S/C, and exploded in the torus room. With regard to the waste processing building, at this point, we cannot deny the possibility that it was damaged by the blast and the hydrogen flowed into it through the pipe penetrations etc.

At this point, we cannot indentify to what extent each component functioned, and therefore, cannot determine how the events of the accident have developed. However, based on results of the severe accident analysis of the current situation, regarding the release of substances to the environment via a leak in the PCV up until the morning of March 15, it is estimated that nearly all the noble gas was released and the proportions released into the environment of iodine, cesium, and tellurium are approx. 0.4% to 7%, 0.3% to 6%, and 0.4% to 3%, respectively.

Table IV-5-2 Fukushima Daiichi NPS, Unit 2 – Main Chronology (Provisional)

* The information included in the table is subject to modifications following later verification. The table was established based on the information provided by TEPCO, but it may include unreliable information due to tangled process of collecting information amid the emergency response. As for the view of the Government of Japan, it is expressed in the body text of the report.

| | Unit 2 | |
|---|---|---|
| | Situation before the earthquake: operating | |
| 3/11 | 14:47 | Reactor SCRAM (large earthquake acceleration)<br>All control rods were fully inserted.<br>Turbine trip<br>Loss of external power supply<br>Emergency diesel generator start-up<br>Main steam isolation valve (MSIV) close |
| | 14:50 | Reactor core isolation cooling system (RCIC) was manually started up. |
| | 14:51 | RCIC trip (L-8) |
| | 15:00 | Residual heat removal system pumps were started up sequentially (for cooling the water in the suppression chamber). |
| | 15:02 | RCIC was manually started up. |
| | 15:07 | Residual heat removal system pumps were ended sequentially |
| | 15:28 | RCIC trip (L-8) |
| | 15:39 | RCIC was manually started up. |
| | 15:41 | All AC power supplies were lost. |
| | 15:42 | TEPCO determined that notification event according to NEPA Article 10 (loss of all AC power supplies) had occurred. |
| | 16:36 | EPCO, believing that it became impossible to inject water using the emergency core cooling system, determined that the event according to NEPA Article 15 had occurred. |
| | 20:30 | RCIC under shutdown<br>Preparation for main control room illumination (temporary power). |
| | 22:00 | Reactor water level Top of Active Fuel (TAF) +3400 mm |
| | 22:47 | RCIC operation cannot be confirmed |
| 3/12 | 0:30 | RCIC under shutdown, water level TAF at 3500 mm (as of 0:00 on 3/12) and reactor pressure at 6.3 MPa (as of 23:25 on 3/11) Dry well (D/W) pressure at 40 Kpa (as of 23:55 on 3/11) |
| | 2:55 | The RCIC start-up state was checked |
| | 4:20 – 5:00 | RCIC water supply was switched from storage tank (CST) to suppression chamber (S/C). |
| 3/13 | 3:00 | D/W pressure rises (315 KPa) (40 KPa as of 0:30 on 3/12). |
| | 11:00 | The second valve was set to "open" for venting |
| 3/14 | 11:01 | It was confirmed that the suppression chamber (S/C) side valve was closed and also confirmed that the valve was inoperable. |
| | 12:00 | The S/C temperature (147°C) and the S/C pressure (485 KPa) were increasing.<br>Since the reactor water level tended to decrease, sea water injection was prepared (12:00: 3400 mm → 12:30: 2950 mm (A), (12:00 3400 mm → 12:30: 3000 mm (B)) |
| | 13:25 | RCIC shut down (assumed)<br>Since the reactor water level decreased and there was the possibility that the RCIC was inoperable, the operator determined that an NEPA Article 15 event (loss of reactor cooling function) had occurred. |
| | 15:00 | The RCIC operation state was being checked. |
| | 16:00 | The operation to open the suppression chamber (S/C) side valve. |
| | 16:20 | It was confirmed that the suppression chamber (S/C) side valve was closed. |
| | 16:34 | The operation to depressurize the reactor pressure vessel (safety relief valve (SRV) open) was performed, and the sea water injection operation was started using fire engine lines. |
| | 17:17 | The water level reached to TAF. |
| | around 18:00 | The reactor pressure decrease was observed.<br>Thereafter, due to the problems including the air pressure for driving SRV and the maintaining excitation of the solenoid valve of the air supply line, the SRV was seemed to be closed and the reactor pressure increased. |
| | 18:22 | The reactor water level reached from TAF to -3700 mm, and it was determined that the whole of the fuel was uncovered. |
| | 19:20 | Fire pumps for sea water injection stopped due to lack of fuel. |
| | 19:54 | The sea water injection started (the first fire pump started up). |
| | 19:57 | The second fire pump started up. |
| | 21:00 | The operation of opening the pressure suppression chamber (S/C) side small valve (opening was unknown). |
| | 21:03 | The reactor pressure decreased (1418 KPa). |
| | 21:20 | By opening two safety relief valves, reactor depressurization and water level restoration were confirmed. Thereafter, due to the problems including the air pressure for driving SRV and the maintaining excitation of the solenoid valve of the air supply line, the closing operation and the opening operation of SRV were seemed to be performed. |
| | around 21:20 | It was observed that the reactor water level tended to recover. |
| | 22:14 | The reactor water level recovered -1800 mm, the core damage was evaluated and determined as 5% or less. |
| | 22:50 | Since the D/W pressure exceeded the maximum operating pressure for design, the operator determined that an event according to NEPA Article 15 (abnormal increase of the reactor containment) had occurred. D/W pressure at 540 KPa. |

| | | Unit 2 |
|---|---|---|
| | Situation before the earthquake: operating | |
| 3/15 | 0:02 | Valve set to "open" for dry venting |
| | 0:45 | Reactor pressure at 1823 KPa |
| | 3:00 | D/W pressure at 750 KPa |
| | | Since the D/W pressure exceeded the maximum operating pressure for design, the depressurizing operation and the injection operation into the reactor were performed, but they were not sufficiently depressurized. |
| | 5:00 | The reactor pressure decreased (626 KPa) |
| | around 6:00 - 6:10 | An explosion thought to be a hydrogen explosion came from near the S/C (loud explosion sound near pressure control room), and all personnel were evacuated except for those necessary for operation (the reactor water level TAF -2800 mm, the reactor pressure unknown, the S/P pressure unknown, the D/W pressure 0.73 MPa. |
| | 8:25 | White smoke (seemed to be steam) was observed near the fifth floor of the reactor building. |
| | 15:25 | The reactor pressure was lower than the containment pressure (the reactor pressure 0.119 Pa the D/W pressure 0.174 MPa gauge |
| | 15:30 | The core damage amount was changed from 14% to 35% |
| 3/16 | | |
| 3/17 | | |
| 3/18 | | |
| 3/19 | | |
| 3/20 | 15:05 | The sea water injection into the spent fuel pool was started by using the fuel pool cooling system (FPC) and subsequent seawater injection was done from the FPC. |
| | 15:46 | 480 V low pressure board for emergency (power center P/C 2C) received power. A temporary power supply was supplied from Tohoku nuclear power line. |
| | 17:20 | Seawater injection into the spent fuel pool ends. Injected water volume approx. 40 t. |
| 3/21 | 18:20 | It was confirmed that the white haze mist like smoke (steam) observed in the reactor building was newly coming out from the roof at the roof floor. |
| 3/22 | 7:11 | The white haze mist like smoke (steam) decreased to be almost disappeared. |
| | 16:07 | Seawater injection into the spent fuel pool was started. |
| | 17:01 | Seawater injection into the spent fuel pool ends. Injected water volume approx. 18 t. |
| 3/23 | | |
| 3/24 | | |
| 3/25 | 10:30 | Seawater injection into the spent fuel pool was started. |
| | 12:19 | Seawater injection into the spent fuel pool ends. Injected water volume approx. 30 t. |
| 3/26 | 10:10 | Fresh water injection into the core was started by using the temporary tank with boric acid dissolved. |
| | 16:40 | Turbine building (T/B) Motor Control Center (MCC) 2A-1 received power. |
| | 16:46 | The main control room lighting recovered. |
| 3/27 | 18:31 | For water injection into the reactor, injection by the fire pumps was switched to fresh water injection by temporary motor pumps. |
| 3/28 | | |
| 3/29 | 15:30 | For water injection into the spent fuel pool, injection by the fire pumps was switched to injection by temporary motor pumps. |
| | 16:45 | Transfer of pooled water from the Condensate Storage Tank (CST) to the suppression pool tank (SPT) starts |
| 3/30 | around 9:45 | Malfunction of the temporary motor pump for injecting cooling water into the spent fuel pool was observed, and the temporary motor pumps were switched to the fire pumps: Injection was interrupted. |
| | 12:30 | Water injection restarted after switching the coolant water injection for the spent fuel pool to the fire pumps. |
| | 12:47 | Crack confirmed in the fire pump hose |
| | 13:10 | Fire pump hose changed |
| | 17:05 | Water injection restarted to the spent fuel pool using the fire pumps. |
| | 19:05 | For water injection into the spent fuel pool, injection by the fire pumps was switched to injection by temporary motor pumps, and the injection was restarted. |
| | 23:50 | Water injection to the spent fuel pool completed, less than 20 t |
| 3/31 | 14:24 | Transfer of pooled water from CST to SPT ends |
| | 15:25 | Transfer of pooled water from CST to SPT starts |
| 4/1 | 11:50 | Transfer of pooled water from CST to SPT ends |
| | 14:56 | Fresh water injection into the spent fuel pool through the spent fuel pool cooling system by the temporary motor pumps was started |
| | 17:05 | Fresh water injection into the spent fuel pool through the spent fuel pool cooling system by the temporary motor pumps was ended, approx. 70 t. |
| 4/2 | 11:05 | It was observed that water exceeding 1000 mSv accumulated in pit near the bar screen, the crack of about 20 cm on the concrete at the side of the pit, and water leakage from the pit into the sea from the crack. |
| | 16:25 | Cement was injected in a pit adjacent at the upstream side of the pit concerned. |
| | 17:02 | The cement injection into the pit concerned was started |
| | 17:10 | Transfer of pooled water from the hot well (H/W) to the Condensate Storage Tank (CST) started |
| | 19:30 | The operation to prevent water leaking from the pit into the sea was suspended since the Alarm Pocket Dossimeter (APD) on the workers exceeded the alarm set point. No significant decrease in outflow status is apparent. |
| 4/3 | 11:50 | The temporary motor-driven pumps used to inject water to the reactor were connected to an permanent power supply, switching from an temporary power supply. |
| | 13:47 | As a measure to stop the leak of accumulated water in a pit near the Inlet Bar Screen, 20 bags of sawdust, 80 bags of polymeric water absorbent, and 3 bags of shredded newspaper were started to be put into the water. |
| | 14:30 | As a measure to stop the leak of accumulated water in a pit near the Inlet Bar Screen, 20 bags of sawdust, 80 bags of polymeric water absorbent, and 3 bags of shredded newspaper were ended to be put into the water. |

| | Unit 2 | |
|---|---|---|
| | Situation before the earthquake: operating | |
| 4/4 | 11:05<br>13:07 | Fresh cooling water injection into the Spent Fuel Pool via a temporary motor-driven pump started.<br>Fresh cooling water injection into the Spent Fuel Pool via a temporary motor-driven pump ended (about 70 t). |
| 4/5 | 14:15<br><br>around 17:00 | A tracer solution was injected through two holes which were made by the workers around the pit near the Inlet Bar Screen. It was confirmed that the tracer solution was observed leaking from the crack into the sea.<br><br>About 1500 L of coagulant was injected. As a result, the flow rate of contaminated water outflow temporarily decreased, but then went back to the original level, and remained at that level. |
| 4/6 | 5:38<br>13:15 | It was confirmed that the outflow of contaminated water from the pit crack had stopped.<br>A rubber board and base jacks were used to cover the crack in the pit from which contaminated water was flowing out |
| 4/7 | 13:29<br><br>14:34 | Fresh water injection into the Spent Fuel Pool via the Spent Fuel Cooling Line using a motor-driven pump started.<br><br>Fresh water injection into the Spent Fuel Pool via the Spent Fuel Cooling Line using a motor-driven pump stopped (about 36 t). |
| 4/8 | | |
| 4/9 | 13:10 | The transfer of held water in the condenser hot well (H/W) to the Condensate Storage Tank was completed. |
| 4/10 | 10:37<br><br>12:38 | Fresh cooling water injection into the Spent Fuel Pool using a temporary motor-driven pump started<br><br>Fresh cooling water injection into the Spent Fuel Pool using a temporary motor-driven pump stopped (about 60 t). |
| 4/11 | About<br>17:16<br>17:56<br>18:04 | The external power supply (Tohoku Electric Power Co. lines) to Units 1 and 2 was interrupted after an earthquake, and the pumps used for water injection to reactors stopped.<br>External power supply restored<br>The pumps used for water injection to reactors resumed. |
| 4/12 | 19:35 | Transfer of pooled water from the trench to H/W started |
| 4/13 | 8:30<br><br>11:00<br>11:00<br>13:15<br><br>14:55<br><br>15:02<br><br>17:04 | Installation of boards (two of the total of seven steel plates) on the ocean side of the Inlet Bar Screen of Unit 2 was started to temporarily stop water leak; and the installation work continued until 10:00.<br><br>The transfer of the accumulated water in the trench of the turbine building to the Hot Well of the Condenser was temporary suspended to check for any leakage. (Amount transferred: about 600 t)<br>Transfer of pooled water from the trench to H/W ended<br>Fresh water injection into the Spent Fuel Pool started via the Spent Fuel Cooling Line using a motor-driven pump started<br><br>Fresh water injection into the Spent Fuel Pool started via the Spent Fuel Cooling Line using a motor-driven pump stopped<br><br>The transfer of the accumulated water in the trench of the turbine building to the Hot Well of the Condenser resumed after having ensured that there was no leakage.<br>Transfer of the accumulated water in the trench of the turbine building to the Hot Well of the Condenser stopped |
| 4/14 | 7:45<br><br>12:20 | Installation of silt fences in front of the Inlet Bar Screens of Units 1 and 2, and at the Curtain Wall to prevent further diffusion of contaminated water started.<br>Installation of silt fences in front of the Inlet Bar Screens of Units 1 and 2, and at the Curtain Wall to prevent further diffusion of contaminated water stopped. |
| 4/15 | 10:19<br><br>17:00 | As a countermeasure against possible tsunamis, transfer of the distribution boards for the water injection pumps to higher ground started.<br><br>As a countermeasure against possible tsunamis, transfer of the distribution boards for the water injection pumps to higher ground ended. |
| 4/16 | 10:13<br><br>11:54 | Fresh water injection into the Spent Fuel Pool started via the Spent Fuel Cooling Line using a temporary motor-driven pump started.<br><br>Fresh water injection into the Spent Fuel Pool started via the Spent Fuel Cooling Line using a temporary motor-driven pump stopped (about 45 t). |
| 4/17 | | |
| 4/18 | 12:13<br><br>12:37<br><br>13:42<br>14:33 | The work of replacing the hose that had been used for injecting water to the reactor core with a new one started.<br><br>The replacement of the hose that had been used for injecting water to the reactor core with a new one was completed. The operation of the injection pump resumed.<br>A survey by an unmanned robot to check the conditions in the reactor building started.<br>A survey by an unmanned robot to check the conditions in the reactor building ended. |
| 4/19 | 10:08<br><br>10:23<br><br>16:08<br><br>17:28 | The transfer of contaminated water from the trench to the Radioactive Waste Treatment Facility started.<br><br>The power supply reinforcement work for Units 1 and 2 to Units 3 and 4 was completed.<br>(Both the Tohoku Genshiryoku Line and the Okuma Line can be used to each other.)<br>Fresh water injection into the Spent Fuel Pool started via the Spent Fuel Cooling Line using a temporary motor-driven pump started.<br><br>Fresh water injection into the Spent Fuel Pool started via the Spent Fuel Cooling Line using a temporary motor-driven pump stopped.<br>Approx. 50 t. |
| 4/20 | | |
| 4/21 | | |
| 4/22 | 15:55<br><br>17:40 | Fresh water injection into the Spent Fuel Pool started via the Spent Fuel Cooling Line using a temporary motor-driven pump started.<br><br>Fresh water injection into the Spent Fuel Pool started via the Spent Fuel Cooling Line using a temporary motor-driven pump stopped.<br>Approx. 50 t. |
| 4/23 | | |
| 4/24 | | |

| | Unit 2 | |
|---|---|---|
| | Situation before the earthquake: operating | |
| 4/25 | 10:12 | Fresh water injection into the Spent Fuel Pool started via the Spent Fuel Cooling Line using a temporary motor-driven pump started. |
| | 11:18 | Fresh water injection into the Spent Fuel Pool started via the Spent Fuel Cooling Line using a temporary motor-driven pump stopped. Approx. 38 t. |
| | 14:44 | To reinforce power supply security (connection between Units 1-2 and Units 5-6), the work to shut off the 6.9-kV power panel for Units 1 and 2 was started. |
| | 17:38 | To reinforce power supply security (connection between Units 1-2 and Units 5-6), the work to shut off the 6.9-kV power panel for Units 1 and 2 was stopped. |
| | 18:25 | The power supply for the pumps injecting water into the reactors was restored to the status in which the external power source was used. |
| 4/26 | | |
| 4/27 | | |
| 4/28 | 10:15 | Fresh water injection into the Spent Fuel Pool started via the Spent Fuel Cooling Line using a temporary motor-driven pump started. |
| | 11:28 | Fresh water injection into the Spent Fuel Pool started via the Spent Fuel Cooling Line using a temporary motor-driven pump stopped. Approx. 43 t. |
| 4/29 | 9:16 | The transfer of accumulated water in the trench of the turbine building to the Radioactive Waste Process Facility was temporary suspended due to inspection of the equipment for transferring and monitoring work. |
| 4/30 | 14:05 | The transfer of accumulated water in the trench of the turbine building to the Process Main Building of the Central Radioactive Waste Process Facility had been suspended due to inspection of the equipment for transferring and monitoring work; but the transfer work resumed using a pump after the completion of the inspection. |
| 5/1 | 13:35 | The work of blocking the trench pit with broken stone and concrete was started. |
| 5/2 | 10:05 | Fresh water injection into the Spent Fuel Pool started via the Spent Fuel Cooling Line using a temporary motor-driven pump started. |
| | 11:40 | Fresh water injection into the Spent Fuel Pool started via the Spent Fuel Cooling Line using a temporary motor-driven pump stopped. Approx. 55 t. |
| | 12:53 | The water injection pump was temporarily switched to a fire-engine pump in order to install an alarm device onto the pump used for injecting water into the reactor core. |
| | 14:53 | After the completion of the installation of an alarm device onto the water injection pump, the water injection pump into the reactor core was put back on; and water injection was carried out. |
| 5/3 | | |
| 5/4 | | |
| 5/5 | | |
| 5/6 | 9:36 | Fresh water injection into the Spent Fuel Pool via the Spent Fuel Cooling Line using a motor-driven pump started. |
| | 11:16 | Fresh water injection into the Spent Fuel Pool via the Spent Fuel Cooling Line using a motor-driven pump stopped. Approx. 58 t. |
| 5/7 | 9:22 | The transfer of accumulated water in the trench of the turbine building to the Radioactive Waste Process Facility had been temporary suspended due to the work performed on the piping of the reactor feed water system for Unit 3. |
| | 16:02 | The transfer of accumulated water in the trench of the turbine building to the Radioactive Waste Process Facility had been temporary suspended due to the work performed on the piping of the reactor feed water system for Unit 3; but the transfer work resumed. |
| 5/8 | | |
| 5/9 | | |
| 5/10 | 9:01 | The transfer of accumulated water in the trench of the turbine building to the Radioactive Waste Process Facility was temporary suspended. |
| | 13:09 | Fresh water injection into the Spent Fuel Pool started via the Spent Fuel Cooling Line using a motor-driven pump started. |
| | 14:45 | Fresh water injection into the Spent Fuel Pool started via the Spent Fuel Cooling Line using a motor-driven pump stopped. Approx. 56 t. |
| 5/11 | 8:47 | The pump to inject water into the reactor was connected to a temporary diesel generator; and water injection was carried out. |
| | 15:55 | The pump to inject water into the reactor was connected to an auxiliary power system, switching from temporary diesel generator; and water injection was carried out. |
| 5/12 | 15:20 | The transfer of accumulated water in the trench of the turbine building to the Radioactive Waste Process Facility had been temporary suspended (due to transfer piping work); but the transfer resumed. |
| 5/13 | | |
| 5/14 | | |
| 5/15 | 13:00 | Fresh water injection into the Spent Fuel Pool via the Spent Fuel Cooling Line using a temporary motor-driven pump started. |
| | 14:37 | Fresh water injection into the Spent Fuel Pool via the Spent Fuel Cooling Line using a temporary motor-driven pump stopped. Approx. 56 t. |
| 5/16 | | |

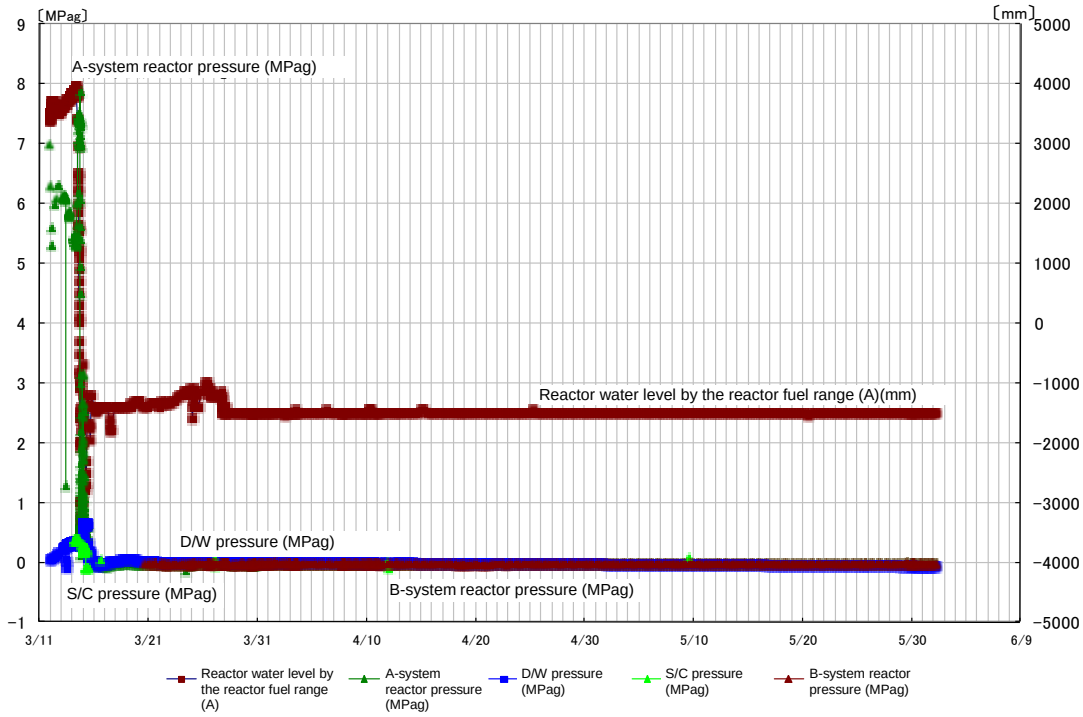


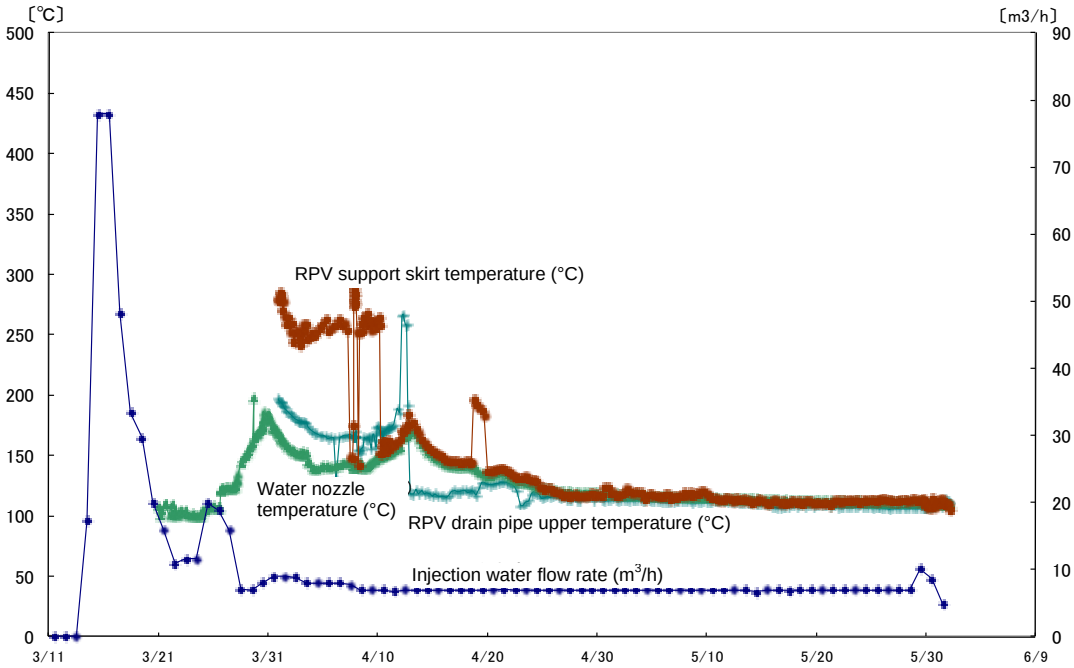


Fig. IV-5-4 Changes in key parameters [1F-2] (From March 11 to May 31)

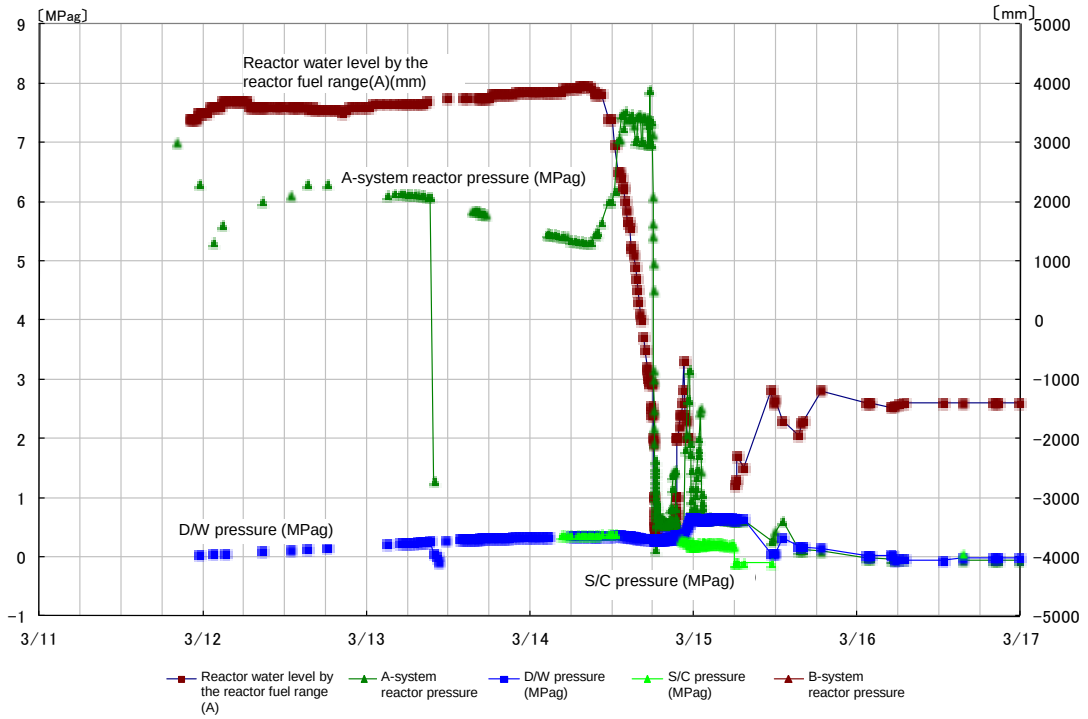


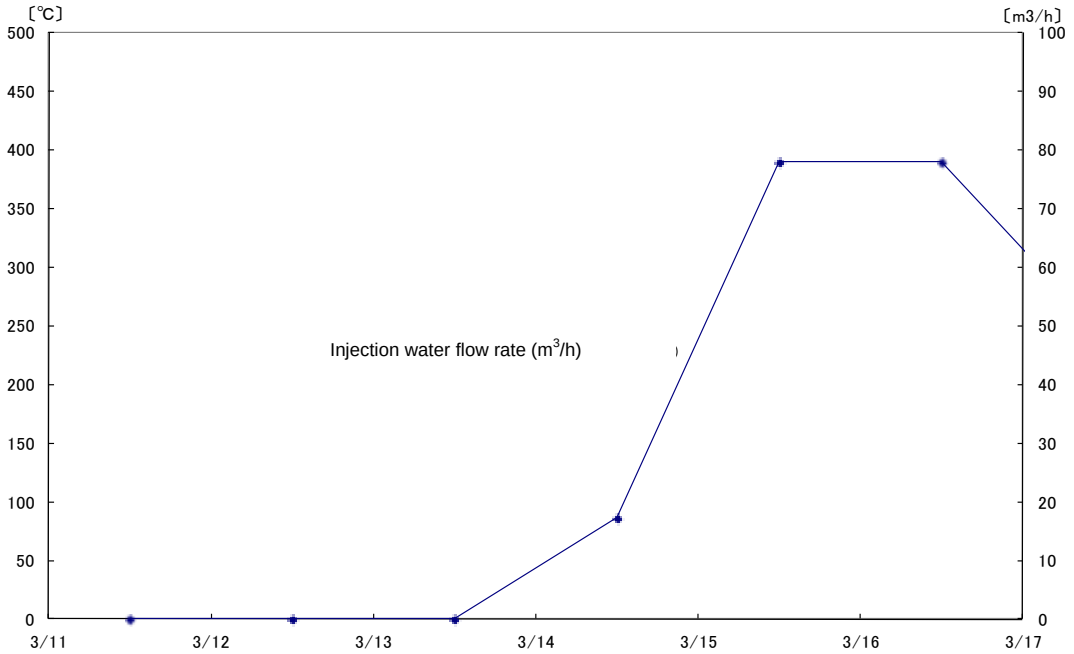


Fig. IV-5-5 Changes in key parameters [1F-2] (From March 11 to March 17)

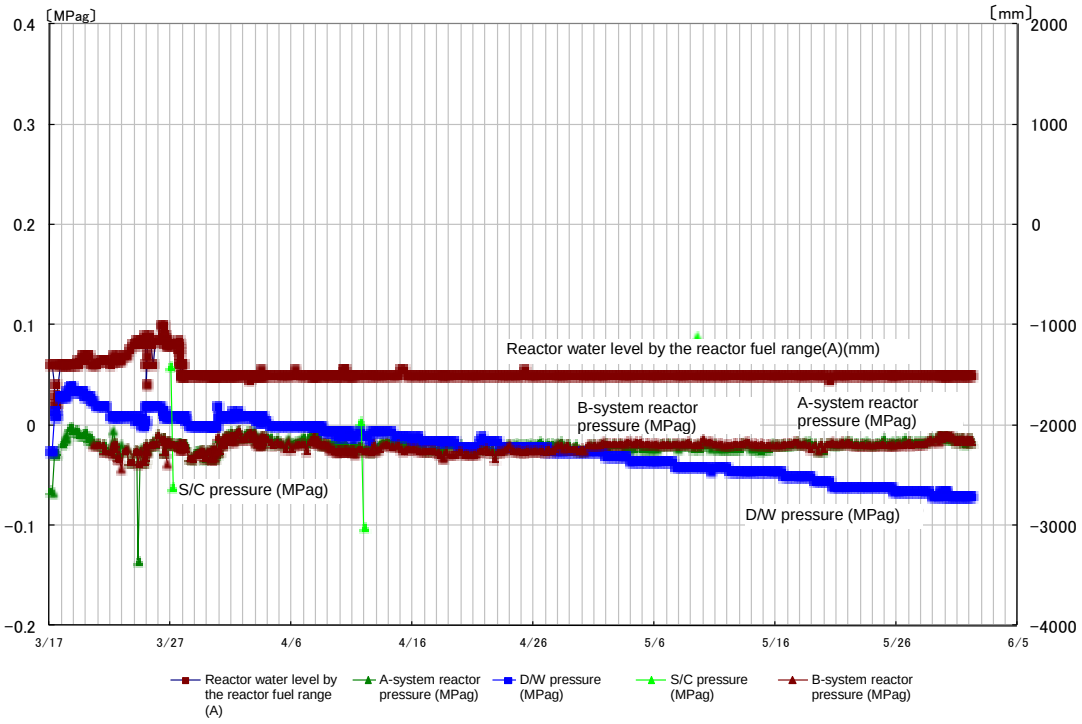


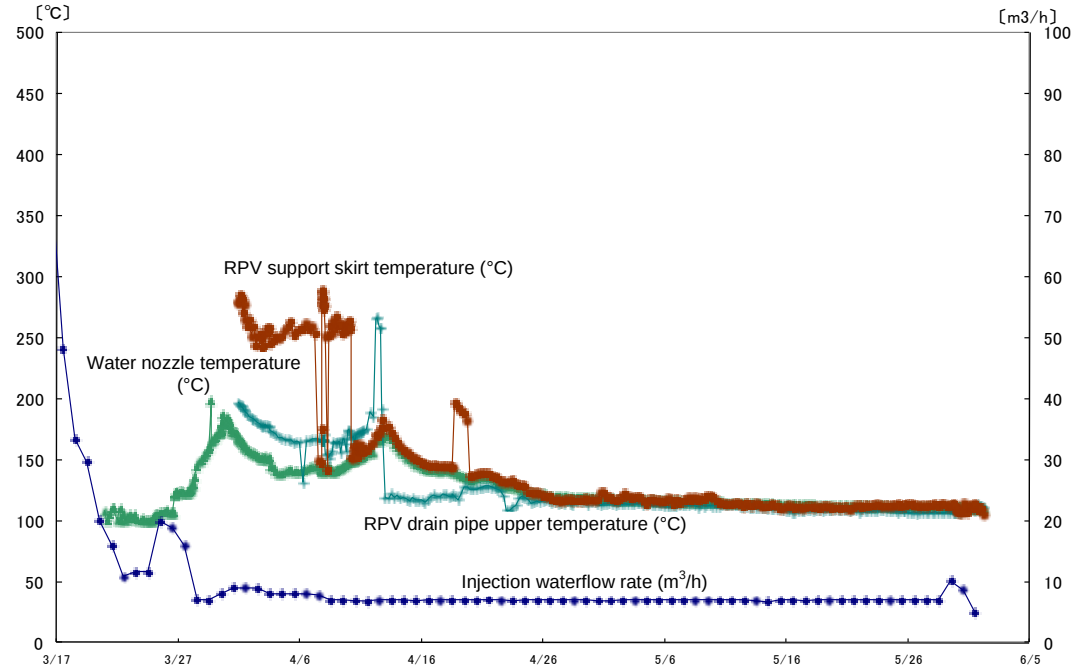


Fig. IV-5-6 Changes in key parameters [1F-2] (From March 17 to May 31)

(3)Fukushima Daiichi NPS, Unit 3

1) Order of accident progress and provisional expedient (chronological sequence)

a From the earthquake until the arrival of the tsunami

As described in Chapter 3, the plant was in full power operation before the earthquakes. After the earthquakes hit, the nuclear reactor at Unit 3 scrammed at 14:47 on March 11 due to the great acceleration of the earthquakes and automatically shut down the reactor as all control rods were inserted to bring the reactor into subcritical. In addition to Okuma Line 3, which was powered off due to repair work started before the earthquake, the breaker at Shintomioka Substation tripped and the breaker for receiving electricity at the switchyard in the power station was damaged, disrupting the power supply from Okuma Line 4. By causing the loss of external power supply, two emergency DGs started automatically.

At 14:48, the loss of power to instruments caused by the loss of external power supply triggered a closure signal at the main steam isolation valve (MSIV) in accordance with the fail-safe design. Regarding the closure of the MSIV, the Tokyo Electric Power Co., Inc. (TEPCO) considered that the main steam pipes did not rupture with the records of the flow rate of the main steam, which would be observed as the increase of the flow rate when the main steam piping breaks. The Nuclear and Industrial Safety Agency (NISA) also agrees that such a judgment would be reasonable.

The closure of the MSIV resulted in increasing of RPV pressure and at 15:05, the reactor core isolation cooling system (RCIC) was manually activated as a precautionary measure. At 15:28, the pressure increase stopped due to the high water level in the reactor.

b Effects of the tsunami

At 15:38, as a result of the impact of the tsunami, two emergency DGs stopped operating and all AC power was lost due to the drenching/submersion of the cooling seawater pumps, the metal-clad switchgear and the emergency bus of Unit 3.

The inability to use the residual heat removal system seawater pumps meant the loss of residual heat removal system (RHR) functions, resulting in a failure to shift the decay heat in the PCV to the sea, the final heat sink.

However, the DC bus of Unit 3 escaped being drenched. Power was not supplied through AC-DC transfer from the DC bus, but rather the backup storage batteries supplied power to the loads (RCIC valves, recorders, etc.) that required direct current for an extended time compared to those of other units.

Because of the drawdown resulting from the shutdown of the RCIC at 15:25, the RCIC started again at 16:03 and stopped at 11:36 on March 12.

The reason why the RCIC stopped at 11:36 on March 12 is unknown at this time, but the storage batteries for valve manipulation might have become exhausted as more than 20 hours had passed since the RCIC started operation.

Afterwards, the HPCI started automatically at 12:35 on March 12 due to the low water level of the core and stopped at 2:42 on March 13. At that time, the plant-related parameters did not indicate any water level, and so the core coolant injection system stopped as the water level in the core was unknown.

At 3:51, after more than one hour had passed since the HPCI stopped, the power was restored to the water level gauge, which showed that the water level for the reactor fuel was -1600 mm (TAF-1600 mm).

It is thought that the HPCI stopped as a result of the lower reactor pressure.

TEPCO judged that the situation corresponded to a “loss of reactor coolant functions” event stipulated according to the provisions of Article 15, paragraph 1 of the NEPA for Nuclear Disaster and notified NISA and other parties in accordance with the requirements of the Act.

c Reactor pressure changes

The reactor pressure transitioned fairly stably after the scram, but at around 9:00 on March 12, the reactor pressure began to show larger fluctuations. From 12:30 to about 19:00, it decreased by more than 6 MPa.

From around 19:00 on March 12, the reactor pressure was being stable around one MPa, but from 2:00 to 2:30 on March 13, being decreased once and then increased to 7 MPa by around 4:00 on the same day. During the initial stage of this reactor pressure change, the HPCI was working, but by stopping the HPCI. When it stopped, the reactor pressure may have risen suddenly.

Considering that the reactor pressure dropped for more than six hours from 12:30 on March 12, it is considered unlikely that a large-scale pressure leak occurred. Steam may have leaked from the HPCI, since the pressure began to drop at around the same time as the HPCI started and the reactor pressure began rising after the HPCI stopped.

At around 9:00 on March 13, the reactor pressure dropped rapidly down to approximately 0 MPa. This may have occurred because of rapid depressurization resulting from the operation of the major steam SRV.

d Emergency measures

In order to lower the PCV pressure after the HPCI stopped at 2:42 on March 12, TEPCO carried out wet venting from 8:41 the same day. From approximately 9:25 on the same day, though TEPCO started injecting fresh water containing boric acid through the fire extinguishing system by using fire engines, the RPV water level still dropped. Even taking this injection into account, this meant that no injection had occurred for six hours and 43 minutes since the HPCI stopped. At 13:12 the same day, water injection was changed to seawater.

To reduce the PCV pressure, wet venting was carried out at 5:20 on March 14.

e Explosion at the building and subsequent measures

An explosion, which was likely a hydrogen explosion, occurred at the upper part of the reactor building at 11:01 on March 14. The explosion destroyed the operation floor and all floors above it, the north and south external walls of the floor below the operation

floor, and the waste processing building. At this time, radioactive materials were released into the atmosphere and the radiation dose in the vicinity of the site increased.

On March 25, fresh water from the pure water storage tank was once again used as an alternative injection to the reactor. As of the end of May, the total injection volume had reached approx. 20,625 $m^3$ (approx 16,130 $m^3$ of fresh water and approx. 4,495 $m^3$ of seawater).

On March 28, reactor injection was performed by temporary motor-driven pumps, and on April 3, their power supply was switched to a permanent power supply. The injection system was thus shifted to a stable system.

While verifying the integrity of load systems through the repair of the transformer at Shin Fukushima Substation and the bypass operation between Line 1 of the Yorunomori Line and Line 3 of the Okuma Line, the power supply has been gradually restored. On March 18, power supply was restored as far as the site metal-clad switchgear, and on March 22, the lighting of the main control room was restored.

The main chronological sequence is shown in Table IV-5-3. Plant data, such as the RPV pressure, is shown in Figures IV-5-7 to IV-5-9.

2) Evaluation using severe accident analysis codes

a Analysis by TEPCO

When TEPCO's analysis showed that the flow volume of the alternative injection water was low, it resulted in damage to the RPV due to melted fuel. TEPCO has used these results in addition to the existing PRV temperature measurement results to evaluate that the greater part of the fuel has in fact been cooled at the bottom of the RPV.

TEPCO estimated that during this process the reactor fuel was exposed for about four hours from 2:42 on March 13, when the HCPI stopped (about forty hours after the earthquake hit), and two hours later, damage to the core began. Later, as the reactor water level was not able to be maintained around the fuel, flow volume for the alternative water injection was assumed. The decay heat began melting the core and the

melted fuel shifted to the lower plenum and then some 66 hours after the earthquake, it started to damage the RPV.

The analysis results show that, along with the damage to the core and the core melt of reactor fuel, the embedded radioactive materials were released into the RPV and moved to the S/C, with the noble gases almost all being released into the environment through PCV vent operation, and approximately 0.5% of the radioactive iodine was released.

Note that TEPCO carried out an additional analysis, which assumed leakage from the HPCI steam system as the RPV and D/W pressures had dropped while HPCI was operating. The analysis results show that the RPV pressure changes and the D/W pressure changes were generally in alignment, but, including the problems with instrumentation, it is not possible to pinpoint the reason the RPV and D/W pressures dropped, nor their current status.

b Crosscheck by NISA

In the crosscheck analyses, NISA analyzed using the MELCOR codes based on the conditions (basic conditions) that TEPCO adopted. In addition, a sensitivity analysis and other analyses were carried out in terms of the relationship with the pump output pressure and determined that the injected water volume for the alternative water injection was in line with the RPV pressure.

The crosscheck under basic conditions indicated nearly the same tendencies as seen by TEPCO. It showed that the fuel was exposed at about 13:08 (41 hours after the earthquake) and three hours later core damage started. The time period the RPV was damaged was about 79 hours after the earthquake.

The analysis results show that the amount of radioactive materials was approx. 0.4% to 0.8% of radioactive iodine was released, and the other nuclides were approx. 0.3% to 0.6%. However, the released amount changes according to the settings for seawater injection flow amounts, etc., and the operating status is unclear, so there is the possibility that this will change depending on the operating status.

Regarding the assumption by TEPCO of operational status for the high pressure water injection system, as there is no quantitative setting basis shown, it is difficult to evaluate

what exactly has happened, and further investigation is required. However, regardless of the high pressure water injection system operating status, the reactor pressure has been restored due to stopping the high pressure water injection system and if the reactor water level can be maintained, then there will be no major effects on the core status and of course no effects on the evaluation of core status.

3) Estimation of RPV and PCV situations

a Confirmation of plant information

The study was done on plant data obtained during the period from March 15 to May 31, when the plant was in a comparatively stable condition, and the plant data from this period was handled as shown below.

An instruction may have been issued to maintain a higher water level in the fuel area since the PCV temperature was high when the PCV pressure was remaining at a high level, and the normal water level dropped due to the evaporation of water in the PCV condensation tank as well as the instrumentation piping. As Unit 3 showed the same tendency that Unit 1 later showed, the water level in the RPV was considered immeasurable.

The RPV pressure was nearly equal to the measured values of the A and B systems, so it was considered to show a close approximation of the actual pressure. For the period when negative pressure was shown, it was considered to be within an error range as such pressure is immeasurable by the pressure gauge.

After March 30, the RPV temperature stayed around 100°C in connection with the RPV pressure and so it was considered to generally show an actual temperature. However, some pieces of data showing high temperature values were excluded from the evaluation as they did not meet with the trend of other measured values.

The plant data up to March 15, which is very limited, was added to the data from March 15 on, and excepting the data regarding the reactor water level, was referred to under the assumption that it reflected the actual situation.

As stated above, there may have been an instruction to keep the water level high in the reactor fuel area. As it is impossible to determine when deviation from the instruction began to occur, only the changes in the situation were referred to roughly in considering information on equipment operation and so forth.

b Estimation of RPV and PCV situations during comparatively stable period

-Situation of RPV boundary

According to the information of the Tokyo Electric Power Co., Inc. (TEPCO), the total injection amount to RPV up to May 31 is considered to be about 20,700 tons. The total amount of vapor generated from the start of injection is about 8,300 tons when the decay heat is estimated on the outside in the decay heat evaluation formulation. If the pressure boundary is secured, a difference of about 12,400 tons at least may be kept there. As the capacity of RPV is 500 $m^3$ at most, the injected water may not only evaporate within RPV and leak as vapor, but also may leak as water. The injection to RPV was executed through the nozzles of recirculating water inlet and water supply equipment. The water injected through the nozzle of water supply equipment would gather once in the outside of shroud (from about 17:00 May 21 to about 23:00 May 28) and then would move to the bottom of RPV via the jet pump diffuser to cool the reactor fuel. The water is very likely to leak to outside at this portion.

From about 23:00 May 29 and on, the injection was switched and continued only through the nozzle of water supply equipment.

The RPV pressure has been close to the atmosphere pressure from March 22 and similar to the D/W pressure of PCV, and so it is now estimated that RPV seems to connect to PCV through the gas phase portion.

-Situation in RPV (reactor core status and water level)

Some RPV temperatures exceeded the measurable range (higher than 400°C) due to the lower injection flow rate caused by the increase of RPV pressure on March 20, but the temperature dropped through the securing of injection flow rate on March 24 and stayed around 100°C. Accordingly a considerable amount of reactor fuel may remain within the RPV. It cannot be denied at this moment that the bottom of the RPV might get

damaged, through which part of reactor fuel might drop to the D/W floor (lower pedestal) and might accumulate there.

The temperature tends to rise in general from the beginning of May. Considering that it partially exceeds 200°C and is higher than the saturation temperature for the RPV pressure, part of reactor fuel may still remain unsubmerged and be cooled by vapor.

-Status of PCV

As the pressure of D/W and S/C exceeded the maximum operating pressure (0.427 MPag) of the PCV to reach about 0.5 MPag on March 13, it is assumed at this moment that the performance of the gaskets of flanges and the seals of penetrations deteriorated. The D/W pressure is maintained around the atmospheric pressure (0 MPag). Therefore, it is assumed at this moment that the vapor generated by decay heat may be released to the outside through D/W.

As the pressure of gas phase portions of S/C stayed at a higher level than the atmospheric pressure and the D/W pressure is close to the atmospheric pressure, the temperature of water that flows from the lower part of D/W down to S/C is 100°C at a maximum. Accordingly, it is now estimated that the 0 MPag or higher pressure of the gas phase portions of S/C is due to noncondensable gasses. Right now, TEPCO is studying how to estimate the water level of D/W.

4) Estimation of situations of RPV, PCV and others at a given moment over time

After the earthquake, water injection continued through the reactor core isolation cooling system (RCIC). Around 12:00 on May 12, the RCIC stopped operation.. Alternatively, water injection was made through the high-pressure coolant injection system (HPCI) but the reactor pressure decreased and thus the reactor water level is estimated to have increased. Before dawn on the morning of March 13, however, the reactor pressure dropped and HPCI stopped operation.

The stoppage of HPCI is estimated to have triggered the reactor pressure to exceed the operation pressure of about 7 MPa. But the main steam safety relief valve (SRV) is estimated to have been activated to release the vapor to S/C to maintain the pressure at

around the 7 MPa level, during which time it is estimated that the reactor water dropped and the reactor fuel was damaged.

It is estimated that the main steam SRV opened to lower the reactor pressure, and at 9:25 on March 13 alternative injection was carried out and wet vent operation done in response to the increase in PCV pressure. It was reported that the alternative injection from fire engines was executed, but this measure could not demonstrate the required performance due to the relation with the reactor pressure, etc. as the water level has not been restored yet. More detailed investigations and analyses of the conditions/situations of equipment would be necessary in order to find out to what extent such measures worked.

5) Analysis of accident event progress

Regarding the progress of events in the accident at Unit 3, previous analyses showed that the RCIC and HPCI ceased to function, so PCV spraying using fire engines and wet vent operation were carried out. In addition, there is the possibility that, based on the water level situation following the start of fresh water injection and RPV pressure reduction operations, not enough water was injected and it is estimated that the lack of sufficient cooling led to core melt, with the melted fuel moving down to the bottom of the RPV.

From the balance between the injected water volume and volume of steam produced, it is estimated that the water injected into the RPV is leaking.

Based on the RPV temperature measurement results, it is considered that a considerable amount of fuel is cooling on the RPV bottom.

The situation of the reactor building after the explosion is not known in detail for certain yet due to the limited site verification. As a result of the execution of numerical fluid dynamic analysis in addition to the severe accident analysis, the release of the gas that contained the hydrogen generated through the reaction between zirconium in the clad of fuel rods and the water in the reactor might accumulate hydrogen sufficient enough to reach the detonation range in the upper space of reactor building to cause the explosion. Along with the explosion, the oil for the MG sets for the control of the rotating speed of recirculation pumps burnt concurrently at the heavily damaged west side of the 4th floor of reactor building. For the waste processing building, it cannot be denied now that it might be damaged not only by the blast waves but also by the explosion of the hydrogen

that flew in through the piping penetrations. The high dose contamination that hinders works in the vicinity of the building was found on part of debris scattered by the explosion. The severe accident analysis, while it does not assume any leakage from the PRV, suggests that it might be the result of radioactive materials that leaked from the PCV adhering to the reactor building structure, as the PCV maximum operating pressure was exceeded.

As it is impossible to identify to what extent each system functioned actually, it is also impossible to determine the event progress situation at this moment. From the results of the severe accident analysis, however, it can be estimated that radioactive materials were released into the environment by the wet vent operation starting at noon on March 13, and almost all the noble gases in the core were released, and the iodine and cesium in the core were released at ratios of approx. 0.5% to 0.8% for each.

Table IV-5-3 Fukushima Daiichi NPS, Unit 3 – Main Chronology (Provisional)

* The information included in the table is subject to modifications following later verification. The table was established based on the information provided by TEPCO, but it may include unreliable information due to tangled process of collecting information amid the emergency response. As for the view of the Government of Japan, it is expressed in the main body of the report.

| | Unit 3 | |
|---|---|---|
| | Status before the earthquake: in operation | |
| 3/11 | | |
| | 14:47 | Reactor scram (high seismic acceleration)<br>Control rods fully inserted (sub-critical)<br>Turbine trip<br>Loss of the external power supply |
| | 14:48 | Emergency diesel generator (emergency DG) turned on<br>Main steam isolation valve (MSIV) closed |
| | 14:52 | Safety relief valve (SR valve) repeatedly opened and closed from this point onwards |
| | 15:05 | Reactor core isolation cooling system (RCIC) manually turned on |
| | 15:25 | RCIC trip (L-8) |
| | 15:38 | All AC power supply lost |
| | 15:42 | TEPCO judged that an event falling under Article 10 of the NEPA (loss of all AC power supplies) had occurred. |
| | 16:03 | RCIC manually turned on |
| | 20:30 | RCIC in operation<br>Lighting in Central Operating Room (temporarily secured and in preparation) |
| | 23:35 | Water level on the decrease (400 mm at 22:58→350 mm (wide range)) |
| 3/12 | | |
| | 11:36 | RCIC trip |
| | 12:35 | High pressure coolant injection system (HPCI) turned on (L2) |
| | 12:45 | Reactor pressure on the decrease (7.53 Mpa at 12:10→ 5.6 MPa) |
| | 20:15 | Reactor pressure on the decrease (0.8 MPa) |
| 3/13 | | |
| | 2:42 | HPCI stopped |
| | 4:15 | Reactor water level was judged to have reached the top of active fuel (TAF). |
| | 5:10 | Due to stoppage of HPCI, injection by RCIC into the reactor was attempted. As RCIC could not be turned on, the event was judged by TEPCO to fall under Article 15 of the NEPA (loss of reactor cooling function). |
| | 6:00 | Water level in the reactor: -3500 mm (wide range) |
| | 7:39 | Spraying onto the PCV began. Water level as of 7:45: TAF -3,000 mm. Reactor pressure: 7.31 MPa. DW pressure: 460 kPa. SC pressure: 440 kKPa. |
| | 8:41 | The second valve (AO valve) was set to "open" for venting. |
| | 9:08 | Operation to reduce pressure in the RPV by relief valve (SRV)<br>It appears that some time after this point the safety relief valve (SRV) was closed and opened, due to issues with maintenance of air pressure for driving SRV and excitation on the electro-magnetic valve on the air supply line. |
| | About 9:20 | Decrease trend of pressure inside PCV detected |
| | 9:25 | Injection of fresh water (borated) into the reactor through the Fire Extinguishing Line began. |
| | 11:17 | Vent line AO valve found closed (through loss of pressure in the tank)<br>From this point on, it was difficult to keep the AOV open due to issues with maintenance of air pressure for driving AOV and excitation on the electro-magnetic valve on the air supply line, and the operation to open it was repeated multiple times. |
| | 12:30 | Operation to open the AO valve on the pressure chamber side. |
| | 13:12 | Fresh water injection to the reactor was switched to seawater injection. |
| | 22:15 | Diesel-driven fire pump (D/DFP) stopped (before it ran out of fuel) |

| | Unit 3 | |
|---|---|---|
| | Status before the earthquake: in operation | |
| 3/14 | | |
| | 1:10 | Seawater injection suspended as supply of seawater for the reactor was running low. |
| | 3:20 | Injection of seawater resumed. |
| | | Measurement by the Containment Atmospheric Monitoring System (CAMS) was 1.4x10$^{2}$Sv/h (DW); the core damage probability was estimated to be about 30%. |
| | 5:20 | The valve (AO valve) was set to "open" for venting. |
| | 6:10 | D/W pressure was 460 Kpa abs |
| | 9:05 | D/W pressure was 490 Kpa abs |
| | About 11:00 | An explosion that appeared to be a hydrogen explosion occurred in the upper part of the reactor building (what appeared to be white smoke rose). |
| | 11:25 | Reactor pressure (A) was 0.185 MPa. DW pressure was 360 KPa. SC pressure was 380 KPa. Water level (A) was -1800 mm. |
| 3/15 | | |
| | 16:00 | AO valve on the SC side found closed |
| | 16:05 | AO valve on the SC side opened |
| 3/16 | | |
| | 1:55 | AO valve on the SC side opened |
| | About 8:30 | A great deal of white smoke was emitted from Unit 3. |
| 3/17 | | |
| | 9:48 | Seawater spraying onto the spent fuel pool by helicopter started. |
| | 10:01 | Seawater spraying onto the spent fuel pool by helicopter stopped. Approx 30 t. |
| | About 19:05 | National Police Agency riot police started to spray water onto the spent fuel pool with a high-pressure water cannon truck. |
| | 19:13 | National Police Agency riot police stopped spraying water onto the spent fuel pool with a high-pressure water cannon truck. Approx. 44 t. |
| | 19:35 | The riot police started to spray water onto the spent fuel pool with their fire engine |
| | 20:09 | The riot police stopped spraying water onto the spent fuel pool with their fire engine. Approx. 30 t |
| | 21:00 | AO valve on the SC side found to be closed. |
| | About 21:30 | AO valve on the SC side opened. |
| 3/18 | | |
| | About 5:30 | AO valve on the SC side found closed |
| | 14:00 | The Self-Defense Force started spraying water onto the spent fuel pool with their fire engine. |
| | 14:38 | The Self-Defense Force stopped spraying water onto the spent fuel pool with their fire engine. Approx. 40 t. |
| | 14:42 | US Armed Forces started spraying water onto the spent fuel pool with their water truck. |
| | 14:45 | US Armed Forces stopped spraying water onto the spent fuel pool with their water truck. Approx. 2 t. |
| 3/19 | | |
| | 0:30 | The Tokyo Fire Department started spraying water with their fire engines onto the spent fuel pool. |
| | 1:10 | The Tokyo Fire Department stopped spraying water with their fire engines onto the spent fuel pool. Approx. 60 t. |
| | 11:30 | AO valve on the SC side found closed. |
| | 14:10 | The Hyper Rescue Unit of the Tokyo Fire Department started spraying water onto the spent fuel pool. |
| 3/20 | 3:40 | The Hyper Rescue Unit of the Tokyo Fire Department stopped spraying water onto the spent fuel pool. Approx. 2430 t. Radiation levels before the water was sprayed were 3417 μSv/h (at 14:10) and after water spraying were 2758 μSv/h (at 3:40) |
| | 11:00 | Pressure inside PCV rose. |
| | About 11:25 | 11:25 AO valve on the SC side opened.. |
| | About 21:36 | The Hyper Rescue Unit of the Tokyo Fire Department started spraying water to cool the spent fuel pool. |
| 3/21 | 3:58 | The Hyper Rescue Unit of the Tokyo Fire Department stopped spraying water onto the spent fuel pool. Approx. 1137 t. |
| | About 15:55 | Grayish smoke rose from the south-eastern part of the rooftop of the reactor building. |
| 3/22 | | |
| | 10:36 | The emergency low-pressure distribution panel (Power Center (P/C) 4D) received power. |
| | 15:10 | The Hyper Rescue Unit of the Tokyo Fire Department started spraying water to cool the spent fuel pool. |
| | 15:59 | The Hyper Rescue Unit of the Tokyo Fire Department stopped spraying water onto the spent fuel pool. Approx. 150 t. |
| | 22:28 | Main Bus Panel for measurement received power (120 VAC). |
| | 22:46 | Lighting in Central Operating Room recovered |

| | Unit 3 | |
|---|---|---|
| | Status before the earthquake: in operation | |
| 3/23 | 11:03 | Seawater injection from the fuel pool cooling and clean-up system (FPC) to cool down the spent fuel pool started. |
| | 13:20 | Seawater injection from the fuel pool cooling and clean-up system (FPC) to cool down the spent fuel pool stopped. Approx. 35 t. |
| | About 16:20 | Slightly blackish smoke was emitted from the reactor building. |
| 3/24 | About 5:35 | Seawater injection from the FPC to cool down the spent fuel pool started |
| | About 16:05 | Seawater injection from the FPC to cool down the spent fuel pool stopped. Approx. 120 t. |
| 3/25 | 13:28 | Water spraying onto the spent fuel pool by the Kawasaki City Fire Bureau supported by the Tokyo Fire Department started. |
| | 16:00 | Water spraying onto the spent fuel pool by the Kawasaki City Fire Bureau supported by the Tokyo Fire Department stopped. Approx. 450 t. |
| | 18:02 | Seawater injection into the reactor was switched to fresh water injection. |
| 3/26 | | |
| 3/27 | 12:34 | Seawater spraying onto the spent fuel pool by TEPCO's Concrete Pump Truck (hereafter, "concrete pump truck") started. |
| | 14:36 | Seawater spraying onto the spent fuel pool by the Concrete Pump Truck stopped. Approx. 100 t. |
| 3/28 | 17:40 | Transfer of pooled water from the Condensate Storage Tank (CST) to the Suppression Pool Water Surge Tank (SPT) started. |
| | 20:30 | Water injection into the reactor is switched from the fire truck pump to injection using the temporary electric pump. |
| 3/29 | 14:17 | Water spraying onto the spent fuel pool by the Concrete Pump Truck starts (from here, fresh water is used). |
| | 18:18 | Water spraying onto the SFP by the Concrete Pump Truck stops (from here, fresh water is used). Approx. 100 t. |
| 3/30 | | |
| 3/31 | 8:37 | Transfer of pooled water from the CST to the SPT completed. |
| | 16:30 | Water spraying onto the spent fuel pool by the Concrete Pump Truck started. |
| | 19:33 | Water spraying onto the spent fuel pool by the Concrete Pump Truck stopped. Approx. 105 t. |
| 4/1 | | |
| 4/2 | 9:52 | Water spraying onto the spent fuel pool by the Concrete Pump Truck started. |
| | 12:54 | Water spraying onto the spent fuel pool by the Concrete Pump Truck stopped. Approx. 75 t. |
| 4/3 | 11:50 | The power supply for the temporary motor-driven pump used for water injection into the reactor was switched from a temporary one to a permanent one. |
| 4/4 | 17:03 | Water spraying onto the spent fuel pool by the Concrete Pump Truck started. |
| | 19:19 | Water spraying onto the spent fuel pool by the Concrete Pump Truck stopped. Approx. 70 t. |
| 4/5 | | |
| 4/6 | | |
| 4/7 | 6:53 | Water spraying onto the spent fuel pool by the Concrete Pump Truck started. |
| | 8:53 | Water spraying onto the spent fuel pool by the Concrete Pump Truck stopped. Approx. 70 t. |
| 4/8 | 17:06 | Water spraying onto the spent fuel pool by the Concrete Pump Truck started. |
| | About 18:30 | AO valve on the SC side found closed. |
| | 20:00 | Water spraying onto the spent fuel pool by the Concrete Pump Truck stopped. Approx. 75 t. |
| 4/9 | | |
| 4/10 | 17:15 | Water spraying onto the spent fuel pool by the Concrete Pump Truck started. |
| | 19:15 | Water spraying onto the spent fuel pool by the Concrete Pump Truck stopped. Approx. 80 t. |
| 4/11 | About 17:16 | As a result of an earthquake, the external power supply for Units 1 and 2 (Tohoku Nuclear Power Line) was lost, and the water injection pump for the reactor was suspended. |
| | 18:04 | The water injection pump for the reactor was restarted. |

| | Unit 3 | |
|---|---|---|
| | Status before the earthquake: in operation | |
| 4/12 | | |
| | 16:26 | Water spraying onto the spent fuel pool by the Concrete Pump Truck started. |
| | 17:16 | Water spraying onto the spent fuel pool by the Concrete Pump Truck stopped. Approx. 35 t. |
| 4/13 | | |
| 4/14 | | |
| | 15:56 | Water spraying onto the spent fuel pool by the Concrete Pump Truck started. |
| | 16:32 | Water spraying onto the spent fuel pool by the Concrete Pump Truck stopped. Approx. 25 t. |
| 4/15 | | |
| | 10:19 | Work began to move the power distribution panel for injection pumps and other equipment to higher ground against tsunami. |
| | 17:00 | Work completed to move the power distribution panel for injection pumps and other equipment to higher ground against tsunami. |
| 4/16 | | |
| 4/17 | | |
| | 11:30 | An unmanned robot inspection of the reactor building started. |
| | 14:00 | An unmanned robot inspected the reactor building finished. |
| 4/18 | | |
| | 12:38 | Work began to replace the hose used to inject water into the reactor with a new one. The reactor injection pump was stopped. |
| | 13:05 | The replacement of the hose used to inject water into the core with a new one was completed. The reactor injection pump was restarted. |
| | 14:17 | Water spraying onto the spent fuel pool by the Concrete Pump Truck started. |
| | 15:02 | Water spraying onto the spent fuel pool by the Concrete Pump Truck stopped. Approx. 30 t. |
| 4/19 | | |
| | 10:23 | Tie line between Units 1 and 2 and Units 3 and 4 was completed.<br>(The Tohoku Genshiryoku Line and the Okuma Line can be used interchangeably.) |
| 4/20 | | |
| 4/21 | | |
| 4/22 | | |
| | 14:19 | Water spraying onto the spent fuel pool by the Concrete Pump Truck started. |
| | 15:40 | Water spraying onto the spent fuel pool by the Concrete Pump Truck stopped. Approx. 50 t. |
| 4/23 | | |
| 4/24 | | |
| 4/25 | | |
| | 18:25 | The power supply for the injection pump for the reactor was restored to an external one. |
| 4/26 | | |
| | 12:00 | Fresh water sprayed into the spent fuel pool by the Concrete Pump Truck. A water surface was detected. |
| | 12:25 | Water injection using the fuel pool cooling and clean-up system (FPC) to cool down the spent fuel pool started. |
| | 14:02 | Water injection using the FPC to cool down the spent fuel pool stopped. Approx. 47.5 t. |
| 4/27 | | |
| 4/28 | | |
| 4/29 | | |
| 4/30 | | |
| | 10:31 | To reinforce the external power supply for Units 3 and 4 (Okuma Line No. 3) from 6.6 KV to 66 KV, the 480 V power supply panel for Unit 4 and the 480 V power supply panel shared with the spent fuel pool were suspended. |
| | 11:34 | The 480 V power supply panel for Unit 4 and the 480 V power supply panel for the spent fuel pool were restored, and power supply reinforcement work was completed. |
| 5/1 | | |
| | 13:35 | To prevent the stagnant water inside the sea-side shafts in the trenches of Units 2 and 3 from spilling over and seawater from coming into them as a result of tsunami, work began to fill the trench shafts with crushed stone, concrete, etc. |
| 5/2 | | |
| | 12:53 | The pump used to inject water into the reactor core was switched to a fire engine pump in order to install an alarm system to the former. |
| | 14:53 | With an alarm system installed, the pump used to inject water into the reactor core was put back to use. |
| 5/3 | | |
| 5/4 | | |
| 5/5 | | |
| 5/6 | | |
| 5/7 | | |

| | Unit 3 | |
|---|---|---|
| | Status before the earthquake: in operation | |
| 5/8 | | |
| | 11:38 | Measurement of water level in spent fuel pool. |
| | 12:10 | Water injection to the spent fuel pool from the FPC started |
| | 14:10 | Water injection to the spent fuel pool from the FPC stopped. 60 t.<br>Measure of water level in the spent fuel pool and sampling started |
| | 14:50 | Measure of water level in the spent fuel pool and sampling finished |
| 5/9 | | |
| | 12:14 | Water injection to the spent fuel pool from the FPC started |
| | 12:39 | Along with injection of water from the FPC to the spent fuel pool, injection of a corrosion inhibitor (hydrazine) is started. |
| | 14:36 | Along with injection of water from the FPC to the spent fuel pool, injection of a corrosion inhibitor (hydrazine) is stopped. |
| | 15:00 | Injection of fresh water using the fuel pool cooling and cleaning system to cool the spent fuel pool is stopped. Approx. 80 t. (Water level of spent fuel pool measured after water injection) |
| 5/10 | | |
| 5/11 | | |
| | 8:47 | The power supply for the pump to inject water into the reactor core was switched to a temporary diesel generator. |
| | About 12:30 | It was confirmed that there was an inflow of water into the cable pit near the screen. |
| | 15:55 | The power supply for the pump to inject water into the reactor core was switched back to the in-house power supply from the temporary diesel generator. |
| | 18:40 | Work began to stop the inflow of water into the cable pit near the screen. |
| | 18:45 | The inflow of water into the cable pit near the screen is confirmed to have stopped. |
| 5/12 | | |
| | 16:53 | As part of the process of switching the source for the injected water from the Fire Extinguishing Line to the Feedwater System, about 3 tons/h of water was injected from the Feedwater System in addition to the 9 tons/h from the Fire Extinguishing Line. |
| 5/13 | | |
| 5/14 | | |
| 5/15 | | |
| 5/16 | | |
| | 15:10 | Along with injection of water using the temporary electric pump to the spent fuel pool, injection of a corrosion inhibitor (hydrazine) is started. |
| | 17:30 | Along with injection of water using the temporary electric pump to the spent fuel pool, injection of a corrosion inhibitor (hydrazine) is stopped. |

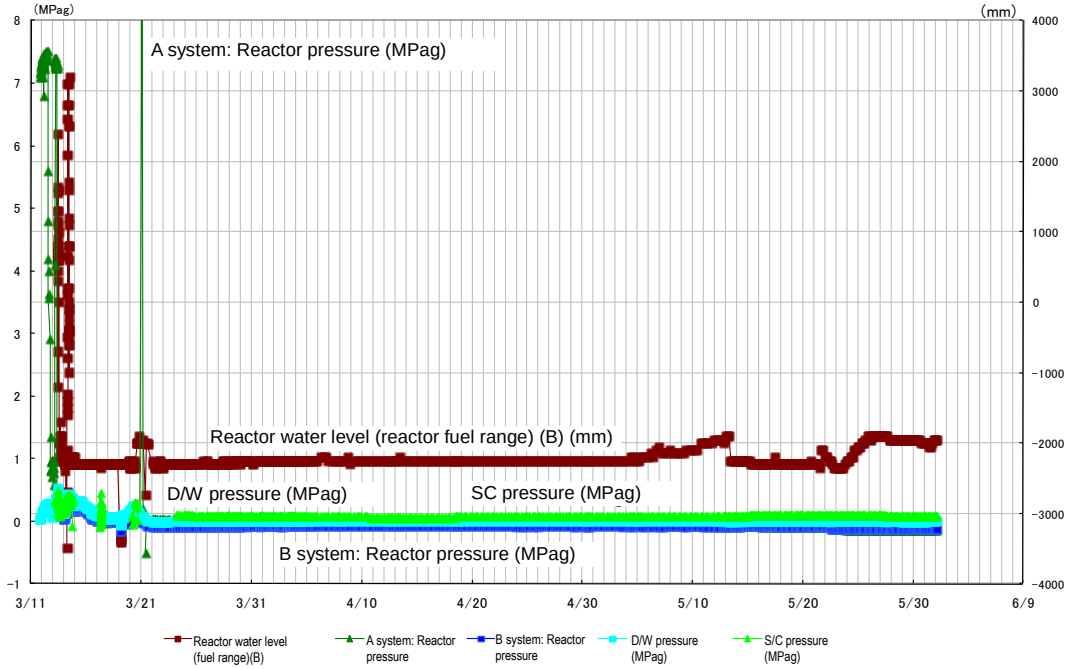


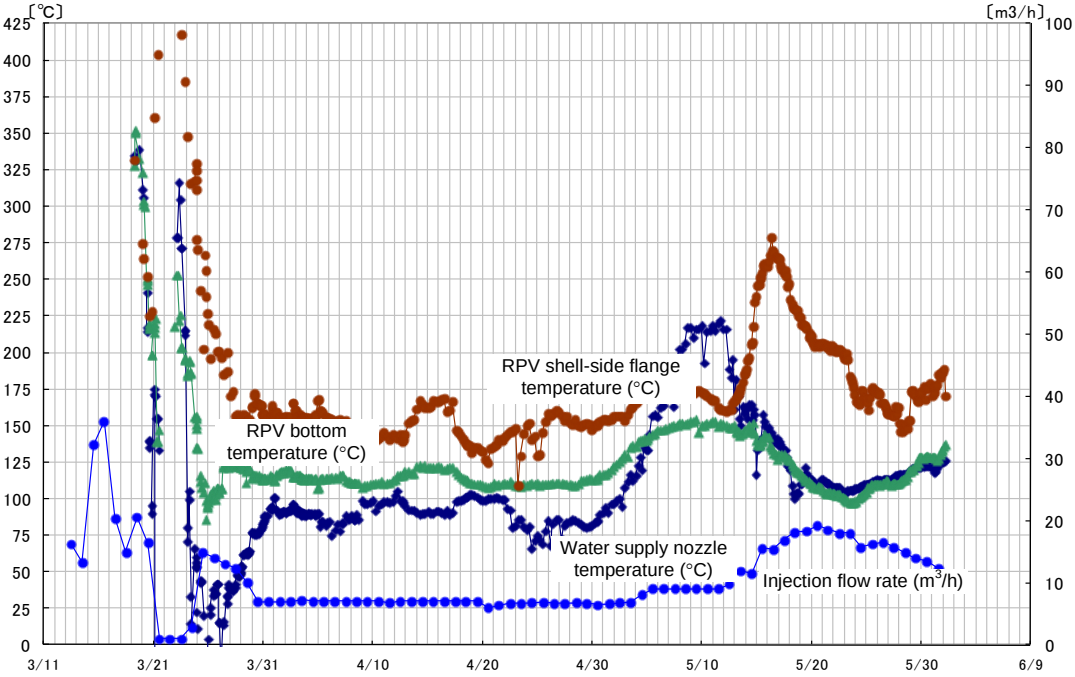


Figure IV-5-7 Changes of Main Parameters (1F-3) (March 11 to May 31)

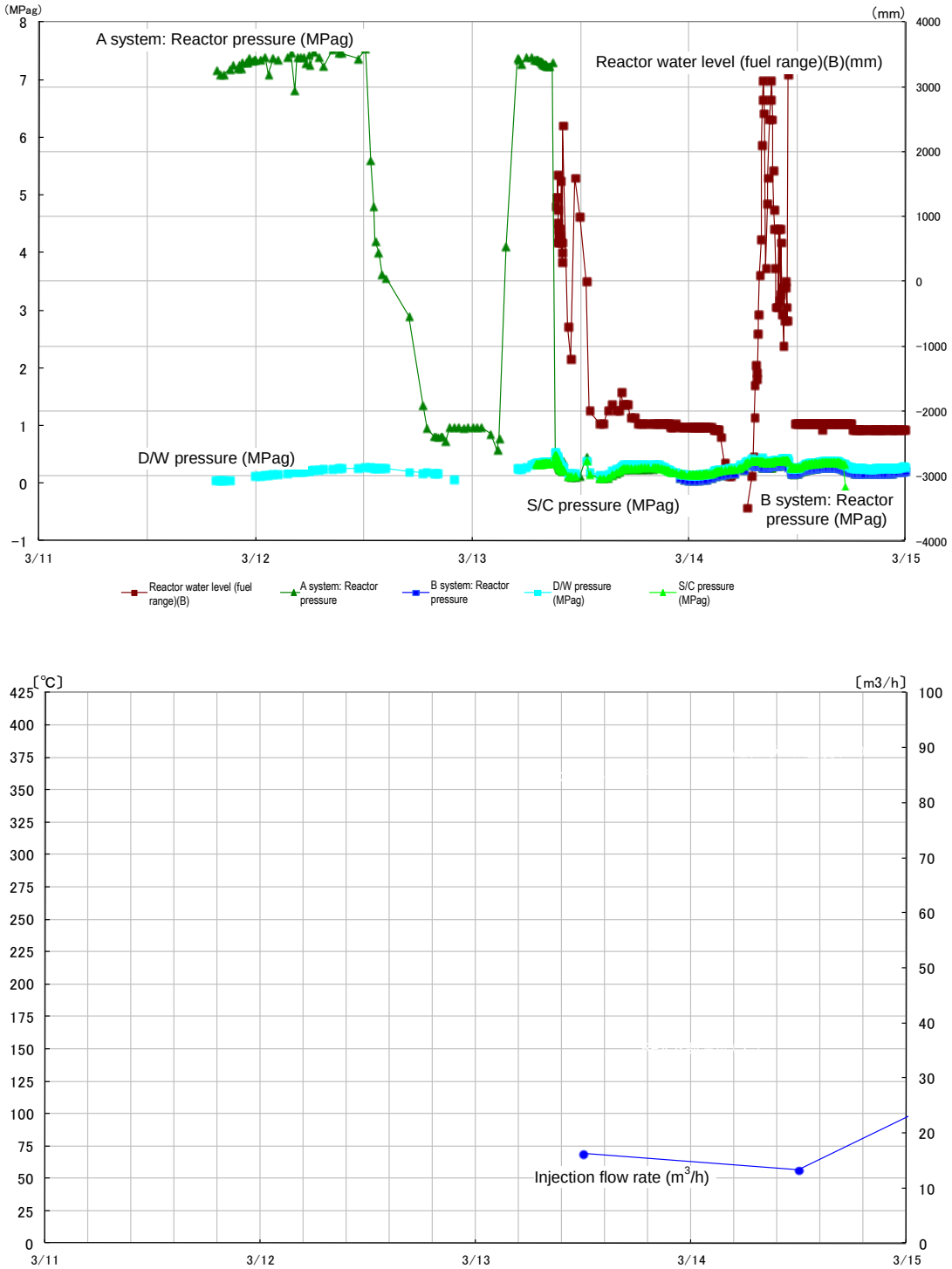


Figure IV-5-8 Changes of Main Parameters (1F-3) (March 11 to March 15)

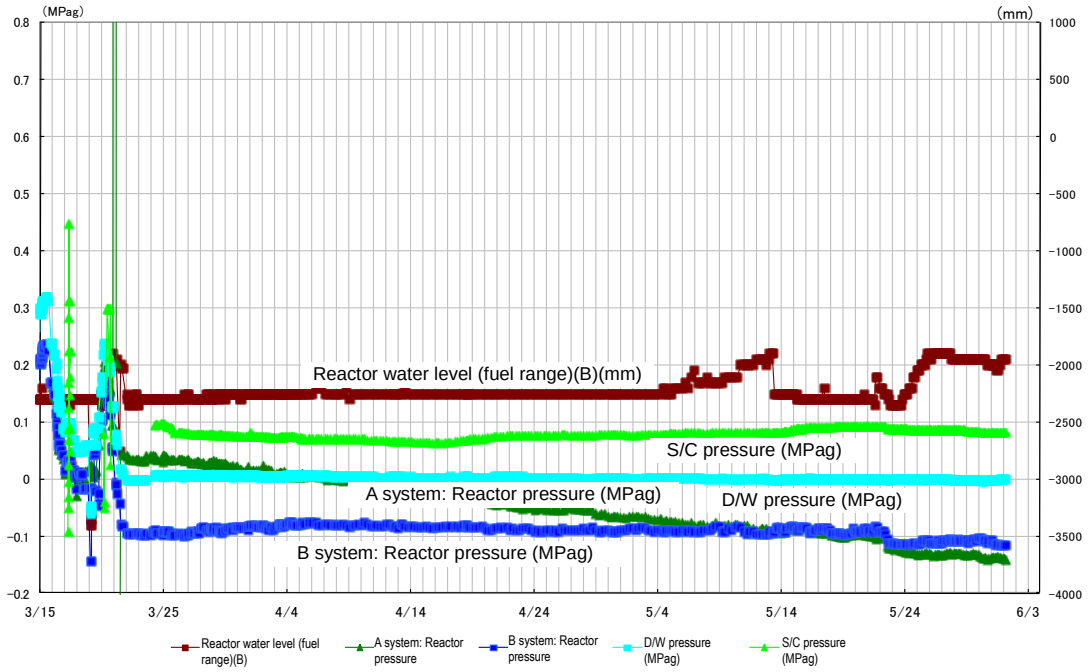


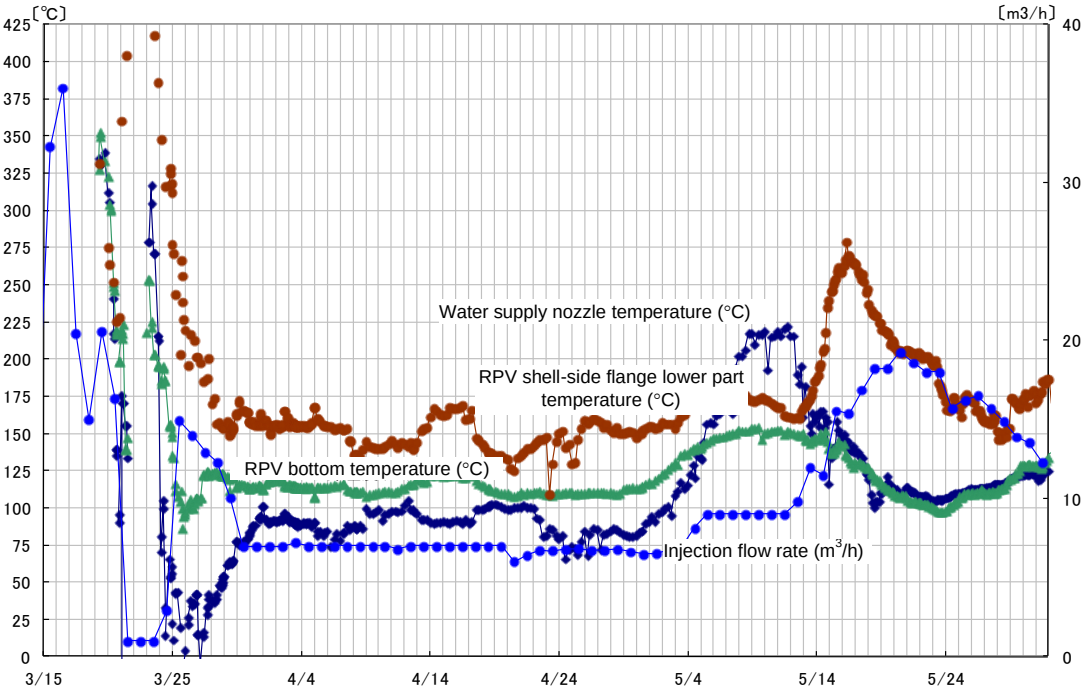


Figure IV-5-9 Changes of Main Parameters (1F-3) (March 15 to May 31)

(4)Fukushima Dai-ichi NPS, Unit 4

1) Order of accident event progress and emergency measures (chronological sequence)

a From the earthquake to the arrival of the tsunami

As described in Chapter 3, Unit 4 was in the periodic inspection and all fuel assemblies were removed from the reactor to the spent fuel pool due to the shroud replacing works of RPV. Therefore, the fuel with relatively high decay heat for one full core was stored in the spent fuel pool. 1,535 pieces of spent fuel assemblies were stored there, which amounted to 97% of its storage capacity of 1,590 pieces.

It was known that the spent fuel pool was fully filled with water as the cutting work of the shroud had been carried out at the reactor side and the pool gate (a divider plate between the reactor well and the spent fuel pool) was closed.
In addition to Okuma Line 3, to which no power was being supplied due to modification work before the earthquake, the Shintomioka Substation breaker tripped and that for receiving electricity at the switchyard in the power station was damaged by the earthquake, disrupting the power supply from Okuma Line 4 as well to cause the loss of external power supply.

As Unit 4 was undergoing periodic inspection, and its process computer and transient recorder were being replaced, the record to verify the startup of the emergency DG does not exist. Judging from the facts that the level of fuel oil tank decreased and the equipment powered by the emergency DG were operating, one emergency DG (the other was being checked) is estimated to have started.

The loss of external power supply stopped the cooling water pump for the spent fuel pool but it was possible to use the RHR system and others that would be powered by the emergency DG when the external power supply was lost.
However, such switching required on-site manual operation and so did not take place before the arrival of the tsunami.

b Effects of the tsunami

At 15:38, Unit 4 went into the situation of the loss of all the AC power supply when one emergency DG stopped its operation due to the drench of the seawater pumps and

metal-clad switch gear caused by the tsunami, and the cooling and water supply functions of the spent fuel pool failed.

c Building explosion and subsequent emergency measures

At 4:08 on March 14, the cooling function of Unit 4's spent fuel pool was lost and the water temperature rose to 84°C. At around 6:00 on March 15, an explosion assumed to be a hydrogen explosion occurred in the reactor building, and the whole part upward from the one floor below the operation floor as well as the western wall and the wall along the stairs were collapsed. Furthermore, at 9:38, a fire was identified in the northwest part of the fourth floor of the reactor building, but TEPCO confirmed at about 11:00 that it had gone out on its own. A fire was also reported to have broken out in the northwest part of the third floor of the building around 5:45 on March 16, but TEPCO was not able confirm this fire on-site at around 6:15.

The cause of the explosion at the reactor building has not been clearly identified because of various limitations for confirmation at the field. For example, assuming that the stored spent fuel had been exposed because of the low water level and the raised temperature, the explosion should have been caused by the hydrogen generated through the reaction of water vapor with the zirconium in the clad of fuel rod; if so, such a phenomenon should have occurred earlier than at the stage when the temperature had risen and the water level had been lowered as estimated from the decay heat of the stored spent fuel. Therefore, at present, the following must be taken into account: cracks produced in the spent fuel pool and the additional decreases in the water level, such as the overflow caused by flushing due to the increase in temperature. As shown in Table IV-5-4 of the analysis result of nuclides in the water extracted from the spent fuel pool using a concrete pump truck, it is assumed no extensive damage in the fuel rods occurred. No damage to the pool, including water leaks and cracks, was found from visual inspections of the pool's condition. On the other hand, at the adjacent Unit 3, it is assumed that a large amount of hydrogen was generated as a result of the core damage, and a part of it was released by the PCV vent line. Also, as shown in Figs. IV-5-10 and IV-5-11, the exhaust duct of the PCV vent line is connected at the exhaust duct of Unit 4 before the exhaust pipe, and a stop valve to prevent reverse flow is not installed at the emergency gas treatment facility. Therefore, it is thought that the hydrogen discharged by venting at Unit 3 may have flowed in.

As mentioned above, the results of analyzing nuclides from the spent fuel pool and visual inspections have revealed that Unit 4's spent fuel pool remains nearly undamaged.

Subsequent water injections are described later in the section regarding the spent fuel pool.

(Currently under analysis)
The main events are described in chronological order in Table IV-5-5.

Table IV-5-4 Analysis of Nuclides from Unit 4's Spent Fuel Pool

| Extracted on | Major Nuclides Detected | Concentration(Bq/cm$^3$) |
|---|---|---|
| April 12 | Cesium 134 | 88 |
| | Cesium 137 | 93 |
| | Iodine 131 | 220 |
| April 28 | Cesium 134 | 49 |
| | Cesium 137 | 55 |
| | Iodine 131 | 27 |
| May 7 | Cesium 134 | 56 |
| | Cesium 137 | 67 |
| | Iodine 131 | 16 |

Table IV-5-5 Fukushima Daiichi NPS Unit 4 Main Chronology (Provisional)

* The information included in the table is subject to modifications following later verification. The table was established based on the information provided by TEPCO, but it may include unreliable information due to tangled process of collecting information amid the emergency response. As for the view of the Government of Japan, it is expressed in the main body of the report.

| | Unit 4 | |
|---|---|---|
| | Status before earthquake: Stopped | |
| 3/11 | | |
| | 14:46 | Stopped for regular inspection |
| | 15:38 | All AC power supply lost |
| | 20:30 | Lighting in Central Operating Room temporarily secured |
| 3/12 | | |
| 3/13 | | |
| 3/14 | | |
| | 4:08 | Spent fuel pool temperature: 84°C |
| 3/15 | | |
| | 6:00 to about 6:10 | 6:00-6:10 (approx.) A large blast is heard. Damage is discovered in the vicinity of the 5th floor roof of the reactor building. |
| | 6:56 | The roof top appears distorted. |
| | 8:11 | Damage to the reactor building is confirmed. As radiation exceeded 500 μSV/h near the main gate, the operator judged it to be a reportable event under Article 15 (Release of radioactive materials through fire or explosion) |
| | 9:38 | A fire is confirmed to have broken out in the vicinity of the north-west corner of the reactor building's third floor. The fire brigade is notified. |
| | | Fire suppression activities are scheduled to be carried out with the US Armed Forces and the In-house Fire Brigade System. |
| 3/16 | | |
| | About 11:00 | When the situation with the reactor building fire is confirmed on-site it is confirmed that the fire had gone out naturally. |
| | 5:45 | Flames are confirmed to be rising from the vicinity of north area of the fourth floor of the Unit 4 building. |
| | | The fire brigade is notified and it prepares to put out the fire. |
| | 6:15 | Reconfirmation of the reactor building fire fails to confirm any fire. |
| | 10:43 | Clouds of what appears to be white steam are coming out from Unit 3, so outside work is stopped, and workers are directed to evacuate to the Emergency Action Room (2.9 mSv/h, 10:55 at the main gate) |
| 3/17 | | |
| 3/18 | | |
| 3/19 | | |
| 3/20 | | |
| | 8:21 | The SDF starts spraying water into the spent fuel pool to cool it down. |
| | 9:40 | The SDF stops spraying water into the spent fuel pool to cool it down. Approx 80 t. |
| | 18:30 | The SDF sprays water into the spent fuel pool. |
| | 19:46 | The SDF sprays water into the spent fuel pool. Approx. 80 t. |
| 3/21 | | |
| | 6:37 | The SDF starts spraying water into the spent fuel pool. |
| | 8:38 | A US Armed Forces water truck sprays water until 8:41. Approx. 2.2 t |
| | 8:41 | All 13 units stop spraying. Approx. 90 t. |
| 3/22 | | |
| | 10:35 | The emergency low-pressure power panel (Power Center (P/C) 4D) receives electricity |
| | 17:17 | Water spraying onto the spent fuel pool by TEPCO's Concrete Pump Truck (hereafter, "concrete pump truck") starts. |
| | 20:32 | Water spraying onto the spent fuel pool by the Concrete Pump Truck stops. Approx. 150 t. |
| | 21:52 | Power reaches main bus board power for measuring |
| 3/23 | | |
| | 10:00 | Spraying from the Concrete Pump Truck to cool the spent fuel pool starts. |
| | 13:02 | Spraying from the Concrete Pump Truck to cool the spent fuel pool stops. Approx. 125 t. |
| 3/24 | | |
| | 14:36 | Spraying from the Concrete Pump Truck to cool the spent fuel pool starts. |
| | 17:30 | Spraying from the Concrete Pump Truck to cool the spent fuel pool stops. Approx. 150 t. |

| | Unit 4 | |
|---|---|---|
| | Status before earthquake: Stopped | |
| 3/25 | 6:05 | Spraying seawater to cool the spent fuel pool using the Spent Fuel Pool Cooling and Clean-up Line (FPC) starts. |
| | 10:20 | Spraying seawater to cool the spent fuel pool using the FPC stops. Approx. 20 t. |
| | 19:05 | Spraying from the Concrete Pump Truck to cool the spent fuel pool starts. |
| | 22:07 | Spraying from the Concrete Pump Truck to cool the spent fuel pool stops. Approx. 150 t. |
| 3/26 | | |
| 3/27 | 16:55 | Spraying from the Concrete Pump Truck to cool the spent fuel pool starts. |
| | 19:25 | Spraying from the Concrete Pump Truck to cool the spent fuel pool stops. Approx. 125 t. |
| 3/28 | | |
| 3/29 | 11:50 | Power reaches the Central Operating Room lights |
| 3/30 | 14:04 | Spraying from the Concrete Pump Truck to cool the spent fuel pool starts. |
| | 18:33 | Water spraying from the Concrete Pump Truck is continued until the water level can be confirmed with the gauges. Fresh water is sprayed. Approx. 140 t (fresh water used from here on). |
| 3/31 | | |
| 4/1 | 8:28 | Spraying from the Concrete Pump Truck to cool the spent fuel pool starts. |
| | 14:14 | Spraying from the Concrete Pump Truck to cool the spent fuel pool stops. Approx. 180 t. |
| 4/2 | 14:25 | Transfer of pooled water from the Concentrated Water Processing Facility (Concentrated RW) to the Turbine Building (T/B) starts. |
| 4/3 | 10:00 | Number of pumps for transferring from concentrated RW to T/B increased from 1 to 5. |
| | 17:14 | Spraying from the Concrete Pump Truck to cool the spent fuel pool starts. |
| | 22:16 | Spraying from the Concrete Pump Truck to cool the spent fuel pool stops. Approx. 180 t. |
| 4/4 | 9:22 | Transfer from the concentrated RW to the T/B stops to check the rise in level of the vertical shaft for Unit 3. |
| 4/5 | 17:35 | Spraying from the Concrete Pump Truck to cool the spent fuel pool starts. |
| | 18:22 | Spraying from the Concrete Pump Truck to cool the spent fuel pool stops. Approx. 20 t. |
| 4/6 | | |
| 4/7 | 18:23 | Spraying from the Concrete Pump Truck to cool the spent fuel pool starts. |
| | 19:40 | Spraying from the Concrete Pump Truck to cool the spent fuel pool stops. Approx. 38 t. |
| 4/8 | | |
| 4/9 | 17:07 | Spraying from the Concrete Pump Truck to cool the spent fuel pool starts. |
| | 19:24 | Spraying from the Concrete Pump Truck to cool the spent fuel pool stops. Approx. 90 t. |
| 4/10 | | |
| 4/11 | | |
| 4/12 | 12:00 | Sampling work starts in the spent fuel pool to check the status of the fuel stored there. |
| | 13:04 | The spent fuel pool sampling work is completed. |
| 4/13 | 0:30 | Spraying from the Concrete Pump Truck to cool the spent fuel pool starts. |
| | 6:57 | Spraying from the Concrete Pump Truck to cool the spent fuel pool stops. Approx. 195 t. |
| 4/14 | 18:10 | The results of the April 13 analysis of radioactive material nuclides on the water taken from the pool on April 12 are reported. |
| 4/15 | 14:30 | Spraying from the Concrete Pump Truck to cool the spent fuel pool starts. |
| | 18:29 | Spraying from the Concrete Pump Truck to cool the spent fuel pool stops. Approx. 140 t. |
| 4/16 | | |
| 4/17 | 17:39 | Spraying from the Concrete Pump Truck to cool the spent fuel pool starts. |
| | 21:22 | Spraying from the Concrete Pump Truck to cool the spent fuel pool stops. Approx. 140 t. |
| 4/18 | | |

| | Unit 4 | |
|---|---|---|
| | Status before earthquake: Stopped | |
| 4/19 | | |
| | 10:17 | Spraying from the Concrete Pump Truck to cool the spent fuel pool starts. |
| | 10:23 | Tie line completed between Units 1, 2 and Units 3, 4<br>(Can use both the Tohoku-Genshiryoku Line and the Okuma Line) |
| | 11:35 | Spraying from the Concrete Pump Truck to cool the spent fuel pool stops. Approx. 40 t. |
| 4/20 | | |
| | 17:08 | Spraying from the Concrete Pump Truck to cool the spent fuel pool starts. |
| | 20:31 | Spraying from the Concrete Pump Truck to cool the spent fuel pool stops. Approx. 100 t. |
| 4/21 | | |
| | 17:14 | Spraying from the Concrete Pump Truck to cool the spent fuel pool starts. |
| | 21:20 | Spraying from the Concrete Pump Truck to cool the spent fuel pool stops. Approx. 140 t. |
| 4/22 | | |
| | 17:52 | Spraying from the Concrete Pump Truck to cool the spent fuel pool starts. |
| | 23:53 | Spraying from the Concrete Pump Truck to cool the spent fuel pool stops. Approx. 200 t. |
| 4/23 | | |
| | 12:30 | Spraying from the Concrete Pump Truck to cool the spent fuel pool starts. |
| | 16:44 | Spraying from the Concrete Pump Truck to cool the spent fuel pool stops. Approx. 140 t. |
| 4/24 | | |
| | 12:25 | Spraying from the Concrete Pump Truck to cool the spent fuel pool starts. |
| | 17:07 | Spraying from the Concrete Pump Truck to cool the spent fuel pool stops. Approx. 165 t. |
| 4/25 | | |
| | 18:15 | Spraying from the Concrete Pump Truck to cool the spent fuel pool starts. |
| | 0:26 | Spraying from the Concrete Pump Truck to cool the spent fuel pool stops. Approx. 210 t. |
| 4/26 | | |
| | 10:23 | As part of the power supply reinforcement work for changing over from the Units 3 & 4 System to the Units 1 & 2 System, work starts on stopping the 480 V power panel for Unit 4. |
| | 16:50 | Spraying from the Concrete Pump Truck to cool the spent fuel pool starts. |
| | 20:35 | Spraying from the Concrete Pump Truck to cool the spent fuel pool stops. Approx. 130 t. |
| 4/27 | | |
| | 12:18 | Spraying from the Concrete Pump Truck to cool the spent fuel pool starts. |
| | 15:15 | Spraying from the Concrete Pump Truck to cool the spent fuel pool stops. Approx. 85 t. |
| 4/28 | | |
| | 11:43 | Measurement of the water level in order to spray water using the Concrete Pump Truck into the spent fuel pool starts. |
| | 11:54 | Measurement of the water level in order to spray water using the Concrete Pump Truck into the spent fuel pool stops |
| | 11:55 | Spent fuel pool sampling starts. |
| | 12:07 | Spent fuel pool sampling stops. |
| 4/29 | | |
| | 10:29 | Spent fuel pool water level measured |
| | 10:35 | Spent fuel pool temperature measured |
| 4/30 | | |
| | 10:14 | Spent fuel pool water level and temperature measurement started. |
| | 10:28 | Spent fuel pool water level and temperature measurement stopped. |
| | 10:31 | To reinforce the external power supply for Units 3 and 4 (Okuma Line No. 3) from 6.6 KV to 66 KV, the 480 V power supply panel for Unit 4 and the 480 V power supply panel shared with the spent fuel pool were suspended. |
| | 11:34 | To reinforce the external power supply for Units 3 and 4 (Okuma Line No. 3) from 6.6 KV to 66 KV, the 480 V power supply panel for Unit 4 and the 480 V power supply panel for the spent fuel pool were restored, and power supply reinforcement work was completed. |
| 5/1 | | |
| | 10:32 | Spent fuel pool water level and temperature measurement started. |
| | 10:38 | Spent fuel pool water level and temperature measurement stopped. |
| 5/2 | 10:10 | Spent fuel pool water level and temperature measurement started. |
| | 10:20 | Spent fuel pool water level and temperature measurement stopped. |
| 5/3 | | |
| | 10:15 | Spent fuel pool water level and temperature measurement started. |
| | 10:23 | Spent fuel pool water level and temperature measurement stopped. |
| 5/4 | | |
| | 10:25 | Spent fuel pool water level and temperature measurement started. |
| | 10:35 | Spent fuel pool water level and temperature measurement stopped. |

| | Unit 4 | |
|---|---|---|
| | Status before earthquake: Stopped | |
| 5/5 | | |
| | 11:55 | Spent fuel pool water level and temperature measurement started. |
| | 12:05 | Spent fuel pool water level and temperature measurement stopped. |
| | 12:19 | Spraying from the Concrete Pump Truck to cool the spent fuel pool starts. |
| | 20:46 | Spraying from the Concrete Pump Truck to cool the spent fuel pool stops. Approx. 270 t. |
| 5/6 | | |
| | 12:16 | Spent fuel pool water level and temperature measurement. |
| | 12:16 | Spent fuel pool water level and temperature measurement. |
| | 12:38 | Spraying from the Concrete Pump Truck to cool the spent fuel pool starts. |
| | 17:51 | Spraying from the Concrete Pump Truck to cool the spent fuel pool stops. Approx. 180 t. |
| 5/7 | | |
| | 11:00 | Water level measured. Temperature measured, sampling |
| | 14:05 | Spraying from the Concrete Pump Truck to cool the spent fuel pool starts. |
| | 17:30 | Spraying from the Concrete Pump Truck to cool the spent fuel pool stops. Approx. 120 t. |
| 5/8 | | |
| | 16:18 | Draining of water from the condenser hot well in the turbine building in order to prepare for work on the injection line into the reactor of Unit 3 starts |
| 5/9 | | |
| | 16:05 | Spraying from the Concrete Pump Truck to cool the spent fuel pool starts. |
| | 19:05 | Spraying from the Concrete Pump Truck to cool the spent fuel pool stops. Approx. 100 t. |
| 5/10 | | |
| 5/11 | | |
| | 16:07 | Spraying from the Concrete Pump Truck to cool the spent fuel pool starts. |
| | 19:38 | Spraying from the Concrete Pump Truck to cool the spent fuel pool stops. Approx. 120 t. |
| 5/12 | | |
| | 12:20 | Reconnection of the 480 V power panel for Unit 4 and the 480 V power panel for the spent fuel pool in order to boost the external power supply (the Okuma No. 3 Line) for Units 3 and 4 from 6.6 KV to 66 KV to receive power from the TEPCO Genshiryoku Line is completed. |
| 5/13 | | |
| | 16:04 | Spraying from the Concrete Pump Truck to cool the spent fuel pool starts. |
| | 16:20 | Along with spraying water into the spent fuel pool, injection of an anti-corrosion agent (hydrazine) is started. |
| | 18:41 | Along with spraying water into the spent fuel pool, injection of an anti-corrosion agent (hydrazine) is stopped. Amount of hydrazine is 0.12 m3. |
| | 19:04 | Spraying from the Concrete Pump Truck to cool the spent fuel pool stops. Approx. 100 t. |
| 5/14 | | |
| 5/15 | | |
| | 16:25 | Spraying from the Concrete Pump Truck to cool the spent fuel pool starts. |
| | 16:26 | Along with spraying water into the spent fuel pool, injection of an anti-corrosion agent (hydrazine) is started. |
| | 18:30 | Along with spraying water into the spent fuel pool, injection of an anti-corrosion agent (hydrazine) is stopped. Amount of hydrazine is 0.3 m3. |
| | 20:25 | Spraying from the Concrete Pump Truck to cool the spent fuel pool stops. |
| 5/16 | | |

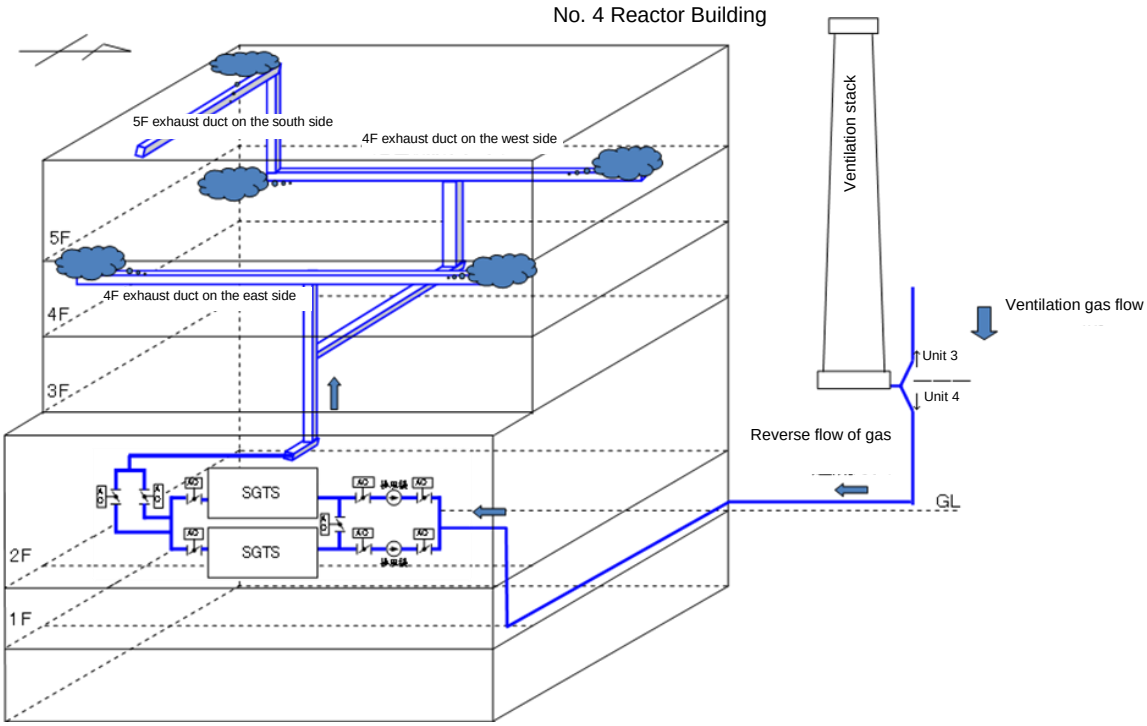


Fig. IV-5-10 Hydrogen flow route from Unit 3 to Unit 4 (estimated)

Fig. IV-5-11 Standby Gas Treatment System exhaust pipe

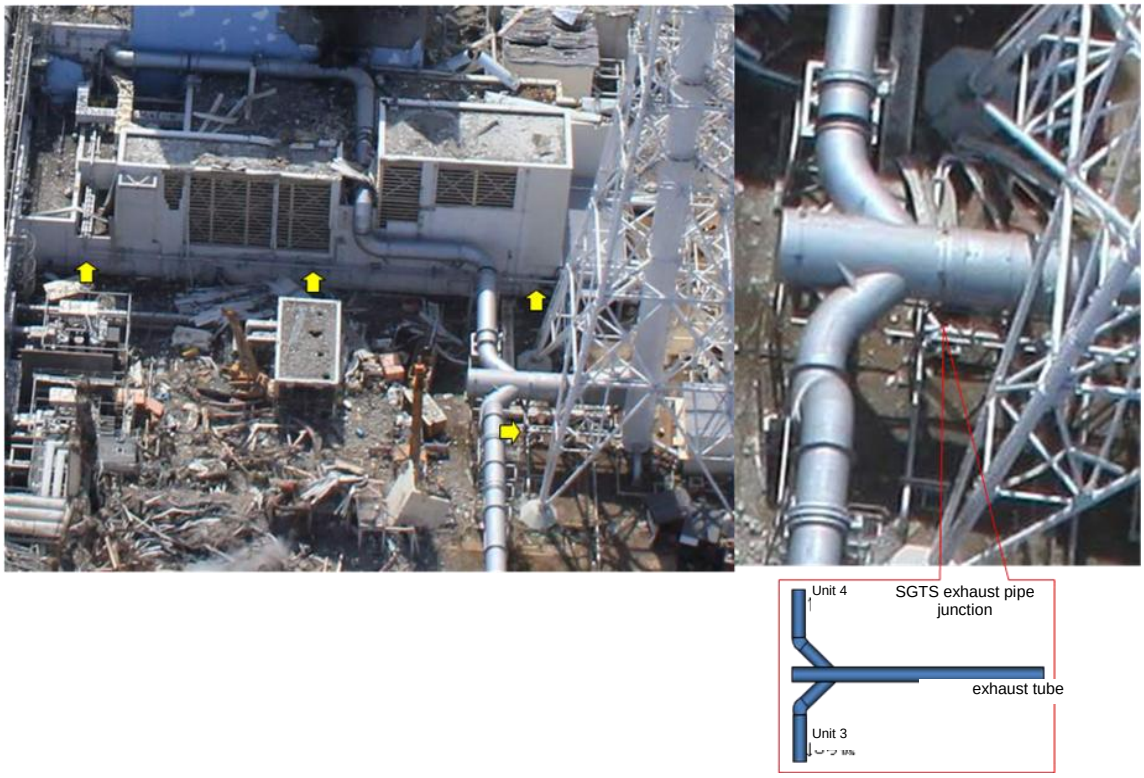

(5) Unit 5 at the Fukushima Daiichi NPS

1) From the outbreak of the earthquakes until the strike of the tsunami

Unit 5 had been suspended due to a periodic inspection since Jan. 3, 2011. On the day of the earthquake, RPV pressure leakage tests had been conducted with fuel being loaded in the reactor. Further, two 66-kV lines from Yorunomori 1 and 2 of were secured as an external power supply.

On March 11, the 66kV transmission line towers at Yorunomori Line 27 were collapsed when the earthquake hit them and the external power supply was lost. Thus, two emergency DGs were automatically activated.

2) Impact of the tsunami

At 15:40, AC power was totally lost because the two emergency DGs halted due to the flooding of the seawater pumps or damage to the metal-clad switch gear resulting from the tsunami. Loss of function of the seawater pumps disabled the RHR system, resulting in a failure to transfer the decay heat to the ocean, the final heat sink.

In the reactor, the pressure had increased to 7.2 MPa because of the pressure leakage test; however, the equipment that had been applying pressure on the reactor pump halted because of the loss of power supply, leading to a temporary pressure drop. Then, the decay heat caused the pressure to moderately increase, resulting in a pressure of around 8 MPa. At 6:06 on March 12, pressure reduction was performed on the RPV, but the pressure continued to increase moderately because of the decay heat.

3) Control of pressure and water level in the reactor

On March 13, water was successfully injected into the reactor using the condensate transfer pump at Unit 5, which received power from the emergency DG at Unit 6. Accordingly, after 5:00 on March 14, the reactor pressure and the water level were controlled by reducing pressure with the SRV and repeatedly refilling the reactor with water from the condensate storage tank through the condensate transfer pump in parallel.

On March 19, a temporary seawater pump was installed to activate the RHR system. The spent fuel pool and the reactor were alternately cooled by switching the components of the RHR, and the reactor achieved cold shutdown at 14:30 on March 20.

The major events that occurred are described in chronological order in Table IV-5-6.

Table IV-5-6 Fukushima Daiichi NPS, Unit 5 - Main Chronology (Provisional)

| | Unit 5 | |
|---|---|---|
| | Situation before the earthquake: stopped | |
| 3/11 | 14:46 | Stopped for periodic inspection (pressure inspection under way) |
| | 15:40 | Loss of all AC power supply |
| 3/12 | 6:06 | Pressure reduction operation on the RPV |
| 3/13 | | Condensate transfer pump started up by means of power supply from Unit 6 |
| 3/14 | | |
| 3/15 | | |
| 3/16 | | |
| 3/17 | | |
| 3/18 | | |
| 3/19 | 5:00 | Residual Heat Removal system (RHR) pump (C) started up |
| | | Completed making (three) holes on the roof in order to prevent hydrogen gas from accumulating within the reactor building |
| 3/20 | 14:30 | Cold shutdown |
| 3/21 | 11:36 | Receiving electricity for metal-clad (M/C) (6C) from starter transformer 5SA (Receiving on-site electricity (for 6.9 kV control panel of power source (6C)) from Yorunomori Line) |
| 3/22 | 20:13 | Receiving electricity for Power Center P/C (P/C) 5A-1 from metal-clad (M/C) (6C) |
| 3/23 | 17:24 | As to Residual Heat Removal Seawater system operated by the temporary pump, test operation after switching its power from temporary to permanent resulted in trip. |
| 3/24 | 8:48 | Receiving electricity in the important seismic isolation building |
| | 16:14 | The temporary seawater pump of the Residual Heat Removal Seawater system started up, Residual Heat Removal system pump started up by reactor shut-down cooling mode (SHC mode) at 16:35. |
| 3/25 | | |
| 3/26 | 23:30 | SHC mode (reactor shut-down cooling mode) |
| 3/27 | | |
| 3/28 | | Pumped the accumulated water in RHR pump room and CS pump room up to the torus room (continued since March 28th) |
| | | Drainage from Reactor Building (R/B) (start transfer from CS room → torus room (continued since March 28th)) |
| 3/29 | | |
| 3/30 | | |
| 3/31 | | |
| 4/1 | | |
| 4/2 | | |
| 4/3 | | |
| 4/4 | | |
| 4/5 | 17:25 | Accumulated water discharge to the ocean through the Sub Drain Pit started |
| 4/6 | | |
| 4/7 | | |

| | | |
|---|---|---|
| 4/8 | 12:14 | Accumulated water discharge to the ocean through the Sub Drain Pit stopped. Amount of discharged water : 950 m3 |
| 4/9 | | |
| 4/10 | | |
| 4/11 | | |
| 4/12 | | |
| 4/13 | | |
| 4/14 | | |
| 4/15 | | |
| 4/16 | | |
| 4/17 | | |
| 4/18 | | |
| 4/19 | | |
| 4/20 | | |
| 4/21 | | |
| 4/22 | | |
| 4/23 | | |
| 4/24 | | |
| 4/25 | | Implemented the tie line with Units 1 and 2 systems generating line |
| | 12:22 | Stopped Residual Heat Removal system (RHR) pump cooling the reactor for the preparation for suspension of the power supply |
| | 16:43 | Residual Heat Removal system (RHR) pump which had been stopped started up again |
| 4/26 | | |
| 4/27 | | |
| 4/28 | | |
| 4/29 | | |
| 4/30 | | |
| 5/1 | | |
| 5/2 | 12:00 | Stopped Residual Heat Removal system (RHR) pump and temporary Residual Heat Removal system (RHR) pump for the test charging of the start-up voltage regulator of Units 5 and 6 in connection with the work for recovery of the permanent power supply |
| | 15:03 | Test charging of the start-up voltage regulator of Units 5 and 6 terminated and Residual Heat Removal system (RHR) pump started up again in connection with the work for recovery of the permanent power supply |
| 5/3 | | |
| 5/4 | | |
| 5/5 | | |
| 5/6 | | |
| 5/7 | | |
| 5/8 | | |
| 5/9 | | |
| 5/10 | | |
| 5/11 | | |
| 5/12 | | |
| 5/13 | | |
| 5/14 | | |
| 5/15 | | |
| 5/16 | | |

The information included in the table is subject to modifications following later verification. The table was established based on the information provided by TEPCO, but it may include unreliable information due to tangled process of collecting information amid the emergency response. As for the view of the Government of Japan, it is expressed in the main body of the report.

(6) Unit 6 at the Fukushima Daiichi NPS

1) From the outbreak of the earthquakes until the strike of the tsunami

Unit 6 had been suspended due to a periodic inspection since Aug. 14, 2010. The reactor was in a cold shutdown condition with the fuel being loaded. Further, two 66-kV lines from Yorunomori Line 1 and 2 had been secured as an external power supply.

On March 11, the 66-kV transmission line towers at Yorunomori Line 27 collapsed when the earthquake hit them and the external power supply was lost. Thus, three emergency DGs were automatically started.

2) Impact of the tsunami

At 15:40, two emergency DGs (6A, 6H) halted due to the flooding of the seawater pumps and damage to the metal-clad switchgears resulting from the tsunami. However, one emergency DG (6B) continued to function. Because the emergency DB (6B) was installed in the DG building at a relatively high location rather than the turbine building, it remained in operation. Thus, Unit 6 did not lose AC power completely. Because of the tsunami, the seawater pumps lost their functions.

The pressure in the reactor moderately increased due to the decay heat; however, the rate of increase was more modest than that of Unit 5 because a longer period of time had elapsed after the halt.

3) Control of pressure and water level in the reactor

On March 13, water was successfully injected into the reactor using the condensate transfer pump, which received power from the emergency DG. Accordingly, after March 14, the reactor pressure and the water level were controlled by reducing pressure with the SRV and repeatedly refilling the reactor with water from the condensate storage tank through the condensate transfer pump in parallel.

On March 19, a temporary seawater pump was installed to activate the RHR system. The spent fuel pool and the reactor were alternately cooled by switching the RHR system interchangeably, and the reactor achieved cold shutdown at 19:27 on March 20.

The major events that occurred are described in chronological order in Table IV-5-7.

Table IV-5-7　Fukushima Daiichi NPS, Unit 6 － Main Chronology (Provisional)

* The information included in the table is subject to modifications following later verification. The table was established based on the information provided by TEPCO, but it may include unreliable information due to tangled process of collecting information amid the emergency response. As for the view of the Government of Japan, it is expressed in the main body of the report.

| | Fukushima Daiichi Nuclear Power Station<br>Unit 6<br>Situation before the earthquake: stopped |
|---|---|
| 3/11 | 14:46 Stopped for periodic inspection<br>15:36 2 diesel generators (DG) trip |
| 3/12 | |
| 3/13 | Condensate transfer pump started up |
| 3/14 | Decompression by the safety bypass valve |
| 3/15 | |
| 3/16 | |
| 3/17 | |
| 3/18 | |
| 3/19 | 4:22 The second unit of Emergency Diesel Generator (A) started up<br>5:11 Fuel Pool Cooling and Cleaning System (FPC) pump started up<br>Completed making (three) holes on the roof in order to prevent hydrogen gas from accumulating within the reactor building<br>21:26 Temporary Remaining Heat Removal Seawater System (RHRS) pump started up<br>22:14 Remaining Heat Removal System (RHR) (B) started up |
| 3/20 | 19:27 Cold shutdown |
| 3/21 | 11:36 Receiving electricity to metal-clad (M/C) (6C) from starter transformer 5SA<br>(Receiving on-site electricity (6.9 kV control panel of power source (6C)) from Yorunomori Line) |
| 3/22 | 19:17 Started receiving electricity from external power supply<br>(2 systems of emergency control panel of power source (6C, 6D) of 6.9 kV on-site power supply system received electricity from the external power supply, Yorunomori Line) |
| 3/23 | |
| 3/24 | |
| 3/25 | 15:38 In operation with power supply for (one) substitute pump for RHRS switched from the temporary to the permanent<br>15:42 In operation with power supply for (one) substitute pump for RHRS switched from the temporary to the permanent |
| 3/26 | |
| 3/27 | 10:14 RHR operating, reactor shut-down cooling mode (SHC mode) |
| 3/28 | |
| 3/29 | |
| 3/30 | |
| 3/31 | |

| | | |
|---|---|---|
| 4/1 | 13:40 | Waste Processing Facility (R/W) underground ® drainage to hot well (H/W) (13:40 April 1st to 10:00 April 2nd) |
| 4/2 | | |
| 4/3 | | |
| 4/4 | 21:00 | Accumulated water discharge to the ocean through the Sub Drain Pit started. |
| 4/5 | 17:25 | As for the second Sub Drain Pit and succeeding Sub Drain Pits after that, groundwater is being discharged to the ocean by means of three operational pumps. |
| | 18:37 | One Sub Drain Pump stopped operation because an unusual sound was detected. |
| 4/6 | | |
| 4/7 | | |
| 4/8 | | |
| 4/9 | 18:52 | Discharge of the low-level radioactive groundwater in Sub Drain Pit stopped with approximately 373 tons of aggregate amount of discharged water |
| 4/10 | | |
| 4/11 | | |
| 4/12 | | |
| 4/13 | | |
| 4/14 | | |
| 4/15 | | |
| 4/16 | | |
| 4/17 | | |
| 4/18 | | |
| 4/19 | | Transfer from Turbine Building (T/B) ® hot well (H/W) |
| 4/20 | | |
| 4/21 | | |
| 4/22 | | |
| 4/23 | | |
| 4/24 | | |
| 4/25 | | Implemented the tie line with 1/2 systems generating line |
| 4/26 | | |
| 4/28 | | |
| 4/29 | | |
| 4/30 | | |
| 5/1 | 14:00 | Started the work to transfer accumulated water in the turbine building to an outside temporary tank. |
| | 17:00 | Transferred 120 m3 of accumulated water in the turbine building to an outside temporary tank. |
| 5/2 | 11:03 | Stopped the temporary Residual Heat Removal Seawater system (RHRS) pump (for investigation of intake channel). |
| | 13:20 | Investigation of the intake channel completed. |
| | 15:03 | Residual Heat Removal system (RHR) pump restarted. |
| 5/3 | | |
| 5/4 | | |
| 5/5 | | |
| 5/6 | | |
| 5/7 | | |
| 5/8 | | |
| 5/9 | | |
| 5/10 | | |
| 5/11 | | |
| 5/12 | | |
| 5/13 | | |
| 5/14 | | |
| 5/15 | | |
| 5/16 | | |

(7) The spent fuel pool at the Fukushima Daiichi NPS

At the Fukushima Daiichi NPS, in addition to the spent fuel pools at Units 1 through 6, a common spent fuel pool is provided for all six reactors. Table IV-5-8 summarizes the capacity, the amount of fuel stored, and the decay heat of the spent fuel stored at these pools. In Unit 4, all fuel had been removed from the reactor because of the shroud replacement work, and the spent fuel pool was being used to store fuel from the core with a relatively high decay heat, so that pool had a higher decay heat than other pools. The condition of Unit 4's spent fuel pool is shown in Figure IV-5-12. On the other hand, because nearly one year had passed since Unit 1's last fuel removal, the decay heat had attenuated. Although the water in the spent fuel pool is usually cooled by releasing heat to the sea, which is the ultimate heat-sink, using FPC (the pool cooling and purification system), cooling failed due to the function loss of both the seawater pumps and the external power supply. In Units 1, 3 and 4, since the upper parts of their buildings were damaged, in order to tentatively secure the cooling function, efforts were made to maintain the proper water levels by external hosing, which was conducted using the Self-Defense Force's helicopters, water cannon trucks, and the Fire Department's pumpers. Since Unit 4 had the greatest decay heat and the fastest decrease in water level due to evaporation, special attention was paid to it to maintain the proper water level. On the other hand, Unit 2's building remained undamaged, and this was thought to suppress the decrease in water level to some extent as evaporated steam condensed on the building's ceiling; efforts were made to recover the water supply line while maintaining the water level by hosing the opening of the building. On and after March 20, water injection began from the primary water supply line. In Units 5 and 6, the power supply was secured from Unit 6's emergency DG as mentioned above, and the cooling function was also secured using the temporary seawater pump, allowing the spent fuel pool and the reactor to be alternately cooled.

Nuclides from the water of the spent fuel pools of Units 2 through 4 were analyzed. The results of Unit 4 have already been shown in Table IV-5-4, and the analysis results of Units 2 and 3 are shown in Table IV-5-9.

It was confirmed that the common pool was almost full on March 18 and the water temperature was 55°C. On March 21, water was tentatively injected from fire engines and the power supply was restored on March 24, after which cooling was started using the

common pool's cooling pump. The major events that occurred are described in chronological order in Table IV-5-10.

Table IV-5-8 Capacity of the spent fuel pool, number of stored assemblies and decay heat.

| | Stored assemblies (new fuel assemblies) | Storage capacity | Decay heat | |
|---|---|---|---|---|
| | | | At the time of the accident (March 11) | 3 months after the accident (June 11) |
| Unit 1 | 392 (100) | 900 | 0.18 | 0.16 |
| Unit 2 | 615 (28) | 1,240 | 0.62 | 0.52 |
| Unit 3 | 566 (52) | 1,220 | 0.54 | 0.46 |
| Unit 4 | 1,535 (204) | 1,590 | 2.26 | 1.58 |
| Unit 5 | 994 (48) | 1,590 | 1.00 | 0.76 |
| Unit 6 | 940 (64) | 1,770 | 0.87 | 0.73 |
| Common pool | 6,375 | 6,840 | 1.13 | 1.12 |

Table IV-5-9 Nuclide analysis of Unit 2 and 3 spent fuel pools

| | Date of sampling | Major nuclides detected | Concentration (Bq/cm$^3$) |
|---|---|---|---|
| Unit 2 | April 16 | Cesium 134 | 160,000 |
| | | Cesium 137 | 150,000 |
| | | Iodine 131 | 4,100 |
| Unit 3 | April 28 | Cesium 134 | 140,000 |
| | | Cesium 136 | 1,600 |
| | | Cesium 137 | 150,000 |
| | | Iodine 131 | 11,000 |

Table IV-5-10 Fukushima Daiichi NPS, Common Spent Fuel Pool – Main Chronology (Provisional)

* The information included in the table is subject to modifications following later verification. The table was established based on the information provided by TEPCO, but it may include unreliable information due to tangled process of collecting information amid the emergency response. As for the view of the Government of Japan, it is expressed in the main body of the report.

| | Fukushima Daiichi Nuclear Power Station<br>Common Spent Fuel Pool<br>Situation before the earthquake: stopped | |
|---|---|---|
| 3/11 | | The water temperature in Common Spent Fuel Pool before the earthquake: approximately 30°C |
| 3/12 | | |
| 3/13 | | |
| 3/14 | | |
| 3/15 | | |
| 3/16 | | |
| 3/17 | | |
| 3/18 | 0:00 | The water temperature in the pool is 57°C |
| 3/20 | | |
| 3/21 | 10:37 | Operation of water injection to Common Spent Fuel Pool by fire engines under way |
| 3/22 | | |
| 3/23 | | |
| 3/24 | 15:37<br>18:05 | Recovery of the temporary power supply of Common Spent Fuel Pool<br>Cooling pump for the Spent Fuel Pool started up |
| 3/25 | 15:20 | The water temperature in the pool is 53°C |
| 3/26 | | |
| 3/27 | 8:00 | The water temperature in the pool is 39°C |
| 3/28 | | The water temperature in the pool is 53°C |
| 3/29 | | |
| 3/30 | | |
| 3/31 | | |
| 4/1 | | |
| 4/2 | | |
| 4/3 | | |
| 4/4 | | |
| 4/5 | | |
| 4/6 | | |
| 4/7 | | |
| 4/8 | | |
| 4/9 | | |
| 4/10 | | |
| 4/11 | | |
| 4/12 | | |
| 4/13 | | |
| 4/14 | | |
| 4/15 | | |
| 4/16 | | Measures against the stagnant water in order to prevent inflow of groundwater into the building (April 16 to April 18) |
| 4/17 | 14:36 | Temporary power supply for Common Spent Fuel Pool stopped (14:36 to 17:30) |
| 4/18 | | |
| 4/19 | | |
| 4/20 | | |

| | |
|---|---|
| 4/21 | |
| 4/22 | |
| 4/23 | |
| 4/24 | |
| 4/25 | |
| 4/26 | |
| 4/27 | |
| 4/28 | |
| 4/29 | |
| 4/30 | 10:31 In order to reinforce the external power supply for Units 3 and 4 (Okuma 3 Line) from 6.6 KV to 66 KV, 480 V control panel of power source for Unit 4 and 480 V control panel of power source for Common Spent Fuel Pool stopped and recovered at 11:34 to terminate the power supply reinforcement work. |
| 5/1 | |
| 5/2 | |
| 5/3 | |
| 5/4 | |
| 5/5 | |
| 5/6 | |
| 5/7 | |
| 5/8 | |
| 5/9 | |
| 5/10 | |
| 5/11 | |
| 5/12 | |
| 5/13 | |
| 5/14 | |
| 5/15 | |
| 5/16 | |

Fig. IV-5-12　Condition of the spent fuel pool (Unit 4)

(8) Status of accumulated water in the Fukushima Daiichi NPS

It is confirmed that water has accumulated in the basements of the turbine buildings of Unit 1 to 4, and such water hinders restoration work. In addition, highly concentrated radioactive material has been found existed in the stagnant water in Unit 2. Attention therefore must be paid with respect to the unintentional discharge of such radiation-tainted water into the environment.

It was decided that some of the stagnant water should be transferred to the condenser. In preparation for this, a plan to transfer the water in the condensed water storage tank to the suppression pool water surge tank and then transfer the water in the condenser to the condensed water storage tank was planned and carried out. A schematic diagram of this transfer work is shown in Figure IV-5-13. However, since the water level of the condenser is increasing in Units 1 and 3 and it is necessary to understand why this is happening, other measures are being planned. Specific details of the plan of future work are described in Section X. Measures to Bring the Accident Under Control. Cameras have been installed to monitor the water level in the turbine building basements and are remotely controlled for this objective.

It has also been confirmed that water has accumulated in the vertical shaft of the trench outside the turbine buildings. Work was carried out to transfer some of the accumulated water to the tanks in the buildings on March 31. At the same time cameras were installed in the shafts to remotely monitor water levels. The work to transfer the accumulated water in the trench in Unit 2 to the centralized waste treatment facility commenced on April 19. Prior to this work, both the low-concentration radioactive wastewater existed in the centralized waste treatment facility and the groundwater in the subdrain of Units 5 and 6 which contained radioactive materials were discharged into the sea in order to obtain some space in the treatment facility and prevent equipment important to safety of Units 5 and 6 from being submerged. Details of these operations are described in Section VI. Discharge of Radioactive Materials to the Environment.

Water samplings were carried out from the accumulated water to analyze the nuclides contained within it, and the results are shown in Table IV-5-11. The concentration detected for Unit 2 is some ten times higher than that for Unit 1 or 3. Since it is estimated that the water in the PCV that had been in contact with the damaged fuel has been directly discharged through a certain route, measures have been taken to start treatment of the

accumulated water and intensively sample the groundwater and seawater to confirm the safety of environment. In addition, as water was found to be being released into the sea near the intake ports adjacent to the trenches of Unit 2 and Unit 3, the release was terminated on April 6 and on May 11. Details are described in Section VI. Discharge of Radioactive Materials to the Environment

Table IV-5-11 Nuclide analysis result of accumulated water (as of June 5)

| Unit | | Unit 1 | Unit 2 | Unit 3 | Unit 4 |
|---|---|---|---|---|---|
| Place of collection | | Basement floor of the turbine building | Basement floor of the turbine building | Basement floor of the turbine building | Basement floor of the turbine building |
| Date of sample collection | | 2011/3/26 | 2011/3/27 | 2011/3/24 (2011/4/22) | 2011/3/24 (2011/4/21) |
| Nuclide detected (half-life) Unit: Bq/cm$^3$ | Molybdate-99 (about 66 hours) | Below detection limit | Below detection limit | Below detection limit (Below detection limit) | $1.0\times10^{0}$ (Below detection limit) |
| | Technetium-99m (about 6 hours) | Below detection limit | Below detection limit | $2.0\times10^{3}$ (Below detection limit) | $6.5\times10^{-1}$ (Below detection limit) |
| | Tellurium-129m (about 34 days) | Below detection limit | Below detection limit | Below detection limit (Below detection limit) | $1.3\times10^{1}$ (Below detection limit) |
| | Iodine-131 (about 8 days) | $1.5\times10^{5}$ | $1.3\times10^{7}$ | $1.2\times10^{6}$ ($6.6\times10^{5}$) | $3.6\times10^{2}$ ($4.3\times10^{3}$) |
| | Iodine-132 (about 2 hours) | Below detection limit | Below detection limit | Below detection limit (Below detection limit) | $1.3\times10^{1}$ (Below detection limit) |
| | Tellurium-132 (about 3 days) | Below detection limit | Below detection limit | Below detection limit (Below detection limit) | $1.4\times10^{1}$ (Below detection limit) |
| | Cesium-134 (about 2 years) | $1.2\times10^{5}$ | $3.1\times10^{6}$ | $1.8\times10^{5}$ ($1.5\times10^{6}$) | $3.1\times10^{1}$ ($7.8\times10^{3}$) |
| | Cesium-136 (about 13 days) | $1.1\times10^{4}$ | $3.2\times10^{5}$ | $2.3\times10^{4}$ ($4.4\times10^{4}$) | $3.7\times10^{0}$ ($2.4\times10^{2}$) |
| | Cesium-137 (about 30 years) | $1.3\times10^{5}$ | $3.0\times10^{6}$ | $1.8\times10^{5}$ ($1.6\times10^{6}$) | $3.2\times10^{1}$ ($8.1\times10^{3}$) |
| | Barium-140 (about 13 days) | Below detection limit | $6.8\times10^{5}$ | $5.2\times10^{4}$ ($9.6\times10^{4}$) | Below detection limit ($6.0\times10^{2}$) |
| | Lanthanum-140 (about 2 days) | Below detection limit | $3.4\times10^{5}$ | $9.1\times10^{3}$ ($9.3\times10^{4}$) | $4.1\times10^{-1}$ ($4.8\times10^{2}$) |

| (2) Transfer from condensers to condensate storage tanks | | |
|---|---|---|
| Unit | Transfer date | Changes in the water level of condensate storage tanks |
| No. 1 | Apr. 3 to 10 | 5% → 56% |
| No. 2 | Apr. 2 to 9 | 4% → 88% |
| No. 3 | Mar. 28 to 31 | 58.2% → 1.2% |

| (1) Transfer from condensate storage tanks to suppression pool water surge tanks | | |
|---|---|---|
| Unit | Transfer date | Changes in the water level of condensate storage tanks |
| No. 1 | Mar. 31 to Apr. 2 | 33% → 5% |
| No. 2 | Mar. 29 to Apr. 1 | 28% → 4% |

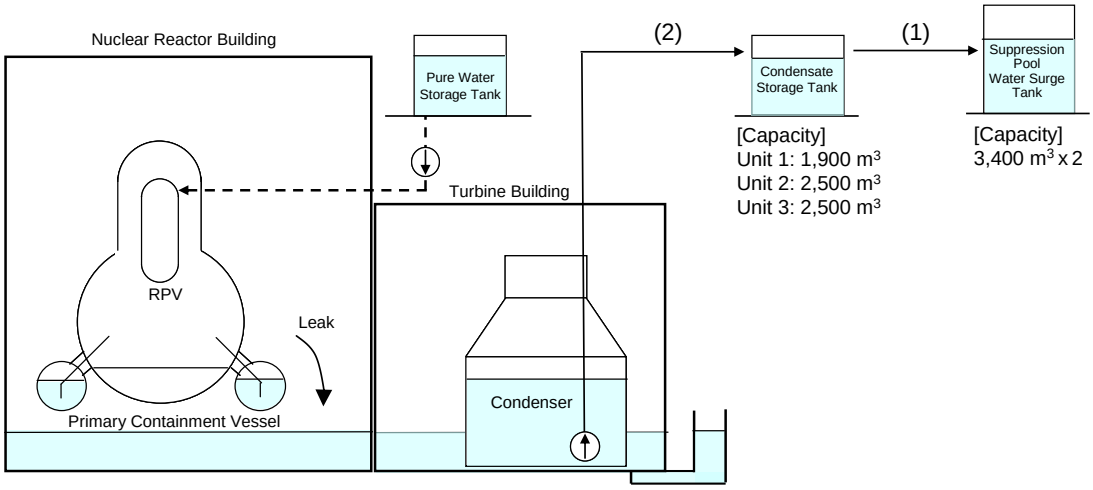


Fig. IV-5-13 Transfer of accumulated water

(9) Fukushima Daini NPS

No significant changes were recorded in the plant data of the Fukushima Daini NPS for Units 1 through 4, prior to the occurrence of the earthquake, and constant rated thermal power operations were being conducted. The live external power sources before the earthquake comprised lines 1 and 2 of the 500 kV Tomioka line and the No. 2 of 66 kV Iwaido line, making three lines in total.

The four nuclear reactors, Units 1 to 4, underwent an automatic shutdown (SCRAM) due to the great seismic acceleration at 14:48 on March 11, and control rods were inserted to the reactors to make them subcritical. The No. 2 of 500 kV Tomioka line stopped supplying power because of the failure and subsequent repair process of the substation equipment, and additionally, the No. 2 of 66 kV Iwaido line stopped supplying power approximately one hour after the earthquake.. So the supply of power to Units 1 to 4 was maintained through the No. 1 of Tomioka line. The No. 2 of 66 kV Iwaido line was recovered from repair at 13:38 on the next day, and the power supply with two lines resumed.

At around 15:34, the tsunami attacked the site of the Daini NPS. This rendered all reactor coolant systems (excluding the RCIC system) including the RHR system for Unit 1 and 2 and all reactor cooling systems (excluding the HPCS system and the RCIC system) including the RHR system for Unit 4 out of operation. The nuclear operator therefore judged that an event defined in Article 10 of the NEPA, "The loss of reactor heat removal," occurred at 18:33.

1) Unit 1

The reactor was being cooled and the sufficient water level of the reactor core was maintained by the RCIC system and the condensate water supply system. However, as final heat removal could not be realized and the temperature of the SC water exceeded 100°C, the nuclear operator notified the NISA and related departments that the event was judged to correspond to an event defined in Article 1 of the NEPA "Loss of reactor pressure control," at 05:22 on March 12, and the cooling of the reactor with a drywell spray was started at 07:10 on March 12.

The motors of the RHR system cooling water pump (D) and emergency component cooling water pump (B) necessary for the RHR system (B) operation were replaced with new ones in order to maintain a means of heat removal by the RHR. In relation to the motors of the seawater pump of the cooling system (B) of the RHR system, the cooling water pump (D) of the RHR system, and the emergency component cooling water pump (B), since the power supply panels connected to those motors were rendered inoperable, the power was supplied to those motors from other available power supply panels with provisional cables. As a result, the operation of the RHR system (B) started to cool the suppression chamber at 01:24 on March 14. This continuation of cooling decreased the temperature of the suppression chamber to below 100˚C at 10:15 on March 14, and the reactor itself came into a status of cold shutdown at 17:00 of the same day.

2) Unit 2

The cooling was being cooled, and the sufficient water level of the reactor core was maintained by the RCIC system and the condensate water supply system. However, as final heat removal could not be realized and the temperature of the suppression chamber water exceeded 100°C, TEPCO notified the NISA and related departments that the event

was judged to correspond to an event defined in Article 1 of the NEPA “Loss of reactor pressure control,” at 05:32 on March 12.,

As regards the motors of the seawater pump (B) of the cooling system of the RHR system, the cooling water pump (B) of the RHR system, and the emergency component cooling water pump (B), since the power supply panels connected to those motors were rendered inoperable, the power was supplied to those motors from other available power supply panels with provisional cables in order to maintain a means of heat removal by RHR. As a result, the operation of the RHR system (B) started to cool the suppression chamber at 07:13 on March 14.

Cooling continued, and the SC temperature decreased to below 100˚C at 15:52 on March 14, and the reactor itself achieved cold shutdown at 18:00 of the same day.

3) Unit 3

Although the RHR system (A) and the LPCS system of Unit 3 failed because of the tsunami damage, the RHR system (B) was not damaged and was able to continue its operation. Thus cooling by this system continued and put the reactor into a status of cold shutdown at 12:15 on March 12.

4) Unit 4

The reactor was being cooled, and the sufficient water level was maintained by the RCIC system and the condensate water supply system. However, as final heat removal could not be realized and the temperature of the SC water exceeded 100°C, the nuclear operator concluded that an event corresponding to an emergency situation defined in Paragraph 1, Article 1 of the NEPA (loss of reactor pressure control) had occurred and notified the Prime Minister at 06:07 on March 12. Following this, the cooling of the reactor with a drywell spray was started at 07:35 on March 12.

In order to secure a means of heat removal by RHR, the motors of the RHR cooling water pump (B) necessary for RHR (B) were replaced. Since the power supply panels connected to the motors of the seawater pump (D) of the cooling system of the RHR system, the cooling water pump (B) of the RHR system, and the emergency component cooling water pump (B) were rendered inoperable, the power was supplied to these

motors from other available power supply panels with provisional cables. As a result, the operation of the RHR system (B) started to cool the suppression chamber at 15:42 on March 14.

As cooling then continued, it decreased the SC temperature to below 100˚C and put the reactor into cold shutdown at 07:15 on March 15.

The time series of major events are shown in Table IV-5-12.

Table IV-5-12　Fukushima Daini NPS, Main Chronology (Provisional)

* The information included in the table is subject to modifications following later verification. The table was established based on the information provided by TEPCO, but it may include unreliable information due to tangled process of collecting information amid the emergency response. As for the view of the Government of Japan, it is expressed in the main body of the report.

| | Overall | Unit 1 | Unit 2 | Unit 3 | Unit 4 |
|---|---|---|---|---|---|
| | | Status before earthquake: Under operation | Status before earthquake: Under operation | Status before earthquake: Under operation | Status before earthquake: Under operation |
| 3/11 | 14:46 Great East Japan Earthquake strikes | | | | |
| | | 14:48 All control rods inserted (subcriticality confirmed)<br>Automatic reactor shutdow<br>Automatic turbine shutdow<br>External power being supplie<br>Main steam isolation valve; closed | 14:48 All control rods inserted (subcriticality confirmed)<br>Automatic reactor shutdow<br>Automatic turbine shutdow<br>External power being supplie<br>Main steam isolation valve; closed | 14:48 All control rods inserted (subcriticality confirmed)<br>Automatic reactor shutdow<br>Turbine automatic shutdow<br>External power being supplie<br>Main steam isolation valve; closed | 14:48 All control rods inserted (subcriticality confirmed)<br>Automatic reactor shutdow<br>Automatic turbine shutdow<br>External power being supplie<br>Main steam isolation valve; closed |
| | 17:35 Unit 1: Operator judges that a Specific Initial Event falling under Article 10 of the NEPA (leakage of reactor coolant) has occurred. | 17:35 Operator judges that a Specific Initial Event falling under Article 10 of the NEPA (leakage of reactor coolant) has occurred. (the operator judges that there is no leakage of reactor coolant as of 19:30 | | | |
| | 18:33 Units 1, 2 4: Operator judges that a Specific Initial Event falling under Article 10 of the NEPA (loss of reactor heat removal function) has occurred. | 18:33 Operator judges that a Specific Initial Event falling under Article 10 of the NEPA (loss of reactor heat removal function) has occurred. | 18:33 Operator judges that a Specific Initial Event falling under Article 10 of the NEPA (loss of reactor heat removal function) has occurred. | | 18:33 Operator judges that a Specific Initial Event falling under Article 10 of the NEPA (loss of reactor heat removal function) has occurred. |
| | | Emergency Core Cooling System (ECCS) high pressure system: not operating<br><br>ECCS low pressure system: manually shut down after actuation (at 20:00) | Emergency Core Cooling System (ECCS) high pressure system: manually shut down after actuation<br>ECCS low pressure system: manually shut down after actuation (at 20:00) | Emergency Core Cooling System (ECCS) high pressure system: prevention of actuation beforehan<br>ECCS low pressure system: prevention of actuation beforehand<br><br>Emergency diesel generator (D/G) (B), (H) operating with no load<br>Residual Heat Removal (RHR) system normal | Emergency Core Cooling System (ECCS) high pressure system: prevention of actuation beforehan<br>ECCS low pressure system: prevention of actuation beforehand<br><br>Emergency D/G (H) operating with no load. (at 20:00) |
| 3/12 | 5:22 Unit 1: Operator judges that an Event falling under Article 15 of the NEPA (loss of reactor pressure suppression function) has occurred. | 5:22 Operator judges that an Event falling under Article 15 of the NEPA (loss of reactor pressure suppression function) has occurred. | | | |
| | 5:32 Unit 2: Operator judges that an Event falling under Article 15 of the NEPA (loss of reactor pressure suppression function) has occurred. | | 5:32 Operator judges that an Event falling under Article 15 of the NEPA (loss of reactor pressure suppression function) has occurred. | | |
| | 6:07 Unit 4: Operator judges that an Event falling under Article 15 of the NEPA (loss of reactor pressure suppression function) has occurred. | | | | 6:07 Operator judges that an Event falling under Article 15 of the NEPA (loss of reactor pressure suppression function) has occurred.Operator judges that an |
| | | 7:10 Dry well (D/W) spraying started | | | |
| | | | 7:11 Dry well (D/W) spraying started | | |
| | | 8:19 Control rod (DR) 10-51 drift alarm sounded | | | |
| | | | | 9:36 RHR (B) shutdown cooling mode | |
| | | 9:43 Containment Vessel (PCV) preparation started | | | |
| | | | 10:33 Containment Vessel (PCV) preparation started | | |
| | | 10:43 Control rod (DR) 10-51 drift alarm cleared | | | |
| | | | 10:58 PCV vent preparation completed | | |
| | | | | | 11:17 HPCS system activatec |
| | | | | | 11:44 Containment Vessel (PCV) preparation started |
| | | | | | 11:52 PCV vent preparation complete |
| | | | | 12:08 Containment Vessel (PCV) preparation started | |
| | 12:15 Unit 3: Reactor cold shutdown | | | 12:13 PCV vent preparation complete | |
| | | | | 12:15 Reactor cold shutdown | |
| | | 18:30 PCV vent preparation complete | | | |
| 3/13 | | 2:03 Control rod (DR) 10-51 drift alarm<br>Control rod (DR) 10-51 drift alarm cleared (as of 12:00) | | | 12:43 Control rod (DR) 10-19 drift alarm sounded |
| 3/14 | 1:24 Unit 1: Cooling started using Residual Heat Removal system (RHR) (B) | 1:24 Cooling started using Residual Heat Removal system (RHR) (B) | | | |
| | 7:13 Unit 2: Cooling started using RHR (B) | | 7:13 Cooling started using Residual Heat Removal system (RHR) (B) | | |
| | | | 7:50 Suppression Chamber (S/C) spraying (using RHR (B)) started | | |
| | 15:42 Unit 4: Cooling started using RHR (B) | | | | 15:42 Cooling started using Residual Heat Removal system (RHR) (B) |
| | 17:00 Unit 1: Reactor cold shutdown | 17:00 Reactor cold shutdown | | | |
| | 18:00 Unit 2: Reactor cold shutdown | | 18:00 Reactor cold shutdown | | |
| | 22:07 Operator judges that a Specific Initial Event falling under Article 10 of the NEPA (increase in radiation within site limits) has occurred. (Is assumed to be the effects of Fukushima Daiichi NPS) | | | | |
| 3/15 | 0:12 Operator judges that a Specific Initial Event falling under Article 10 of the NEPA (increase in radiation within site limits) has occurred. (Is assumed to be the effects of Fukushima Daiichi NPS) | | | | |
| | 7:15 Unit 4: Reactor cold shutdown | | | | 7:15 Reactor cold shutdown |
| 3/16 | | | | | |
| 3/17 | | | | 9:55 Restored to normal status from PCV vent preparation completed status | |
| | | | | | 11:24 Restored to normal status from PCV vent preparation completed status |
| | | | 17:19 Restored to normal status from PCV vent preparation completed status | | |
| | | 17:22 Restored to normal status from PCV vent preparation completed status | | | |
| 3/18 | | | | | |
| 3/19 | | 15:28 RHR (B) shut down (for inspection of RHRC system pump) | | | |
| | | 22:14 RHR pump (B) start-up | | | |
| 3/20 | | | | 14:36 RHR (B) shut down (to switch to Suppression Chamber (S/C) cooling) | |
| | | | | 15:05 RHR pump (B) start-up S/C cooling started | |

| | Overall | Unit 1 | Unit 2 | Unit 3 | Unit 4 |
|---|---|---|---|---|---|
| | | Status before earthquake: Under operation | Status before earthquake: Under operation | Status before earthquake: Under operation | Status before earthquake: Under operation |
| 3/21 | | | | | |
| 3/22 | | | | | |
| 3/23 | | | | | |
| 3/24 | | | | | |
| 3/25 | | | | | |
| 3/26 | | | | | |
| 3/27 | | | | 10:50 RHR (B) shut down<br>Currently switching RHR operation mode | |
| 3/28 | | | | | |
| 3/29 | | | | | 10:52 RHR pump (B) shut down (for inspection of intake) |
| | | | | | 14:00 RHR pump (B) start-up |
| 3/30 | | | 10:25 RHR (B) shut down (for installation of temporary power system) | | |
| | | 10:34 RHR (B) shut down (for installation of temporary power system) | | | |
| | | | 14:04 RHR (B) start-up | | |
| | | 14:30 Acquisition of RHR (B) back-up power (emergency power)<br>RHR (B) start-up | | | |
| | | 17:56 Detection of smoke occurrence from power board located in 1F of turbine | | | |
| | | 18:13 After shutdown of power supply, disappearance of smoke was confirmed | | | |
| | | 19:15 It was concluded that smoke occurrence was caused by abnormal condition of power board and therefore not by the fire | | | |
| 3/31 | | | | | 14:35 RHR (B) shut down (reactor shutdown cooling mode (SHC) + Suppression Chamber cooling mode (S/C)→ SHC + S/C + Fuel Pool Cooling mode (FPC) |
| 4/1 | | | | | 15:36 RHR (B) activated |
| | | 13:43 RHR pump (B) shut down (for inspection of intake) | | | |
| | | 15:07 RHR pump (B) start-up | | | |
| 4/2 | | | | | |
| 4/3 | | | | | |
| 4/4 | | | | | |
| 4/5 | | | | | |
| 4/6 | | | | | |
| 4/7 | | | | | |
| 4/8 | | | | | |
| 4/9 | | | | | |
| 4/10 | | | | | |
| 4/11 | | | | | |
| 4/12 | | | | | |
| 4/13 | | | | | |
| 4/14 | | | | | |
| 4/15 | | | | | |
| 4/16 | | | | | |
| 4/17 | | | | | |
| 4/18 | | | | | |
| 4/19 | | | | | |
| 4/20 | | | | | |
| 4/21 | | | | | |
| 4/22 | | | | | |
| 4/23 | | | | | |
| 4/24 | | | | | |
| 4/25 | | | | | |
| 4/26 | | | | | |
| 4/27 | | | | | 10:20 RHR (B) shut down (for switching of power system) |
| | | | | | 17:41 RHR (B) activated |
| 4/28 | | | | | |
| 4/29 | | | | | |
| 4/30 | | 9:10 RHR (B) shut down (for inspection of intake waterway) | | | |
| | | 12:54 RHR (B) activated | | | |
| 5/1 | | | | | |
| 5/2 | | | | | |
| 5/3 | | | | | |
| 5/4 | | | | | |
| 5/5 | | | | | |
| 5/6 | | | | | |
| 5/7 | | | | | |
| 5/8 | | | | | |
| 5/9 | | | | 9:51 RHR (B) shut down (for inspection of intake waterway) | |
| | | | | 14:46 RHR (B) activated | |
| 5/10 | | | | | |
| 5/11 | | | | | |
| 5/12 | | | 9:36 RHR (B) shut down (for inspection of intake waterway | | |
| | | | 12:13 RHR (B) activated | | |
| 5/13 | | | | | |
| 5/14 | | | | | |
| 5/15 | | | | | |
| 5/16 | | | | | |

## 6. Situation at Other Nuclear Power Stations

### (1) Higashidori Nuclear Power Station

Unit 1 was under periodic inspection at the time of earthquake occurrence on March 11, and all the fuel in the reactor core had been taken out and placed into the spent fuel pool.

Since all of the three lines of off-site power supply had stopped due to the earthquake, off-site power supply was lost and the emergency DG (A) (the emergency DG (B) was under inspection) fed power to the emergency generating line.

After the off-site power supply was lost due to the Miyagi Earthquake occurred on April 7, emergency DGs started, and the power was securely restored. Following this, although off-site power supply was restored, the emergency DGs stopped operation in an incident, and all the emergency DGs became inoperable.

### (2)Onagawa Nuclear Power Station

Units 1 and 3 were under constant rated thermal power operation at the time the earthquake occurred on March 11 and Unit 2 was under reactor start-up operation. Four out of the five lines of off-site power supply stopped as a result of the earthquake, but off-site power supply was maintained through the continued operation of one power line.

The reactor at Unit 1 tripped at 14:46 due to seismic acceleration high, and the emergency DGs (A) and (B) started automatically. Since the start-up transformer stopped due to an earth fault/ short-circuit in the high-voltage metal-clad switchgear caused by the earthquake at 14:55, this led to a loss of power supply in the station. The emergency DGs (A) and (B) fed power to the emergency generating line.

Since all feed water/condensate system pumps stopped due to loss of normal power sources, the RCIC fed water to the reactor and the Control Rod Hydraulic System fed water after reactor depressurization. Since the condenser was unavailable due to the stoppage of the circulating water pump, the MSIV was totally closed, the cooling and depressurization operations of the nuclear reactor were performed by the RHR and the SRV, and the reactor reached a state of cold shutdown with a reactor coolant temperature of less than 100°C at 0:57 on March 12. Since the reactor was in start-up operation, Unit 2 shifted promptly to cold shutdown because the reactor had stopped automatically at 14:46 as a result of the great seismic acceleration. The emergency DGs (A), (B) and (H) automatically started due to issuance of a field failure signal from the generator at 14:47. But the three emergency DGs remained in a stand-by state since off-site power source was secured.

Subsequently, because the reactor auxiliary component cooling water system B pump, reactor cooling seawater system (RSW) B pump, and the high-pressure core spray auxiliary component cooling system pumps were inundated as a result of the tsunami and lost functions, the emergency DGs (B) and (H) tripped. However, because the component cooling water system A pump was intact, there was no influence on the reactor's cooling function.

The reactor at Unit 3 tripped at 14:46 due to seismic acceleration high. The off-site power source was maintained but the turbine component cooling seawater pump was stopped due to inundation by tsunami. All the feeding water/condenser pumps were then manually stopped and the RCIC fed water to the reactor. In addition, the control rod hydraulic system and condensate water makeup system fed water to the reactor after the reactor depressurization.

Since the condenser was unavailable due to the stoppage of all circulating water pumps resulted from undertow of the tsunami, the MSIV was totally closed and cooling and depressurization operations of the reactor were performed by the RHR and the SRV, leading the reactor to a state of cold shutdown with a reactor coolant temperature of less than 100°C at 1:17 on March 12.

(3) The Tokai Daini Power Station

The Tokai-Daini Power Station was under constant rated thermal power operation at the time of earthquake occurrence on March 11. At 14:48 on the same day, the reactor tripped due to turbine trip caused by turbine shaft bearing vibration large signal due to the earthquake. Immediately after the occurrence of the earthquake, all three off-site power source systems were lost. However, the power supply to the equipment for emergency use was secured by the activation of three emergency DGs.

The HPCS and the RCIC started automatically in response to the fluctuation of the water level immediately after the trip of the reactor, and the water level of the reactor was kept at a normal level. The water level of the reactor was then maintained by the RCIC, and the pressure of the reactor was controlled by the SRV. Moreover, RHRs A and B were manually started in order to cool the S/C for decay heat removal after the nuclear reactor tripped.

Subsequently, the DG2C seawater pump for emergency use tripped as a consequence of tsunami and the DG2C pump became inoperable. But the remaining two DGs secured power supply to the emergency equipment, and the cooling of the S/C was maintained by residual heat removal system RHR (B).

One off-site power supply system was restored at 19:37 on March 13, and the nuclear reactor reached a state of cold shutdown with a coolant temperature of less than 100°C at 0:40 on March 15.

Figure IV-6-1 Map showing the Location of Nuclear Power Stations

## 7. Evaluation of accident consequences

In the wake of the occurrence of loss of functions in many facilities due to an extensive earthquake and a tsunami, items to be improved in the future will be identified by evaluating a variety of aspects.

### (1) Causes of the accident at the Fukushima-Daiichi Nuclear Power Station

Units 1, 2 and 3 of the Fukushima-Daiichi Nuclear Power Station lost all off-site power sources immediately after the earthquake. But the emergency DGs started operation and secured on-site power supply, maintaining the normal operation of cooling systems of the RCIC and the IC.

Then, due to an attack of tsunami, the emergency DGs and the metal-clad switchgear were inundated and covered with water, resulting in loss of all AC power. The seawater cooling system was also covered with water and the function to transport heat to the sea, which is the ultimate heat sink, was lost.

Since all AC power was lost (dc power was also lost for unit 1), the IC of Unit 1 became inoperable. In addition, reactor core cooling of Units 2 and 3 also stopped following the depletion of dc power (in the form of a storage battery) and the halt of cooling water supply. Damage to the reactor began due to the lowering of the water level in the reactor core, resulting in eventual core melt.

Despite the fact that the emergency DGs and the seawater cooling system of the Fukushima-Dai-ni Nuclear Power Station were hit by the earthquake and the tsunami, continued power supply from the off-site power source maintained the water level of the reactor. Additionally, since monitoring of plant conditions was also possible, plant management was possible to control the reactor, and high temperature shutdown could be maintained in a stable way. Meanwhile, recovery efforts, such as the exchange of the electric motors of the seawater cooling system that was covered with water due to tsunami, were conducted, and the system reached a state of cold shutdown within a number of days. Similarly, the Onagawa Nuclear Power Station and the

Tokai-Daini Power Station, also hit by the earthquake and the tsunami, reached cold shutdown states since off-site or on-site power supplies were secured.

From these facts, the direct cause of the accident in Units 1, 2 and 3 of the Fukushima-Daiichi Nuclear Power Station is thought to have been the loss of all power sources, which led to the failure of cooling the reactor core, then damage to the reactor core, resulting in a core melt.

In the light of these facts, it appears that, in cases of complete loss of ac power and losses of seawater and water cooling functions, a power supply necessary for operating the cooling systems, such as the RCIC and a water supply necessary for reactor core cooling, are indispensable. Extensive measures such as prior securing of essential machines and materials and the preparation of response plans such as manuals to be used in case of emergency, were necessary for emergency measures.

(2) Evaluation from the standpoint of preventing accidents: Countermeasures for earthquakes and tsunamis

The accident was caused by the attack of an earthquake and a tsunami.
At present, damage caused by the earthquake was concerned with off-site power supply systems. Damage to safety-important systems and components was not confirmed, and the plant was in a manageable condition until the arrival of the tsunami. However, detailed nature of the destruction has not been clear and remains to be seen. In addition, it has been verified that the acceleration response spectrum of the seismic ground motion observed on the basement of the reactor building of the Fukushima-Daiichi Nuclear Power Station exceeds the acceleration response spectrum at the same location relative to standard design ground motion Ss settled on based on the Regulatory Guide for Reviewing Seismic Design of Nuclear Power Reactor Facilities in a part of the oscillation band. Evaluation of seismic safety by seismic response analysis for the reactor buildings and major safety-important systems is necessary in the future (units 2 and 4 will be evaluated by the middle of June and units 1 and 3 by the end of July).

As for off-site power supply systems, each unit was connected to the power system by more than one power line in accordance with Guideline 48(G48) of Regulatory Guide for Reviewing Safety Design of Light Water Nuclear Power Reactor Facilities (Electrical Systems), and the redundancy requirement was satisfied. However, the point of the Guideline is to secure a reliable off-site power supply, although this is not clearly required in the Guideline.

For instance, the following events occurred in the accident:

- Actuation of protective devices due to collapse and short-circuits of transformers at the major substations connected to the Fukushima-Daiichi Nuclear Power Station.
- The switching stations (Units 3 and 4 and Units 5 and 6) where the off-site power supply is received were damaged by the tsunami. The power receiving circuit breaker was destroyed in Units 1 and 2 due to the earthquake.

Considering these facts, the facilities were not sufficiently prepared in the context of securing resistance to earthquakes, independence, and reducing the likelihood of common cause failure.

As for tsunami, the design tsunami height at Fukushima-Daiichi NPS was O.P. + 5.7 m. But experts estimated that tsunami of 10 m or higher attacked, though no record of tide gauge readings was available as described in III 2(1). Consequently, water tightness of buildings and other facilities in some plants was insufficient for tsunami of such height, and this resulted in total loss of power, including DC power supply, which was outside the scope of design. The design tsunami height at Fukushima-Daini NPS was estimated to be O.P. + 5.2 m. As described in III 2(2), neither record of tide gauge readings nor the height estimated by experts is available, and it is not sure how high the tsunami was. Nevertheless, it is considered that the actual tsunami height exceeded the design tsunami height.

Documented procedures did not assume ingress of tsunami, but specified only operation of stopping circulating water pumps used for cooling condensers as measures against undertow. The PSA referred to in accident management survey of these units did not take into account long time loss of functions of

emergency DGs and loss of ultimate heat sink, which could be caused by tsunami.

Just like other equipment, emergency DGs in most units became inoperable due to loss of the emergency DG main units, sea water pumps for cooling, and the metal-clad switchgear. On the other hand, Units 5 and 6 of Fukushima-Daiichi NPS kept operating after tsunami, and kept supplying AC power required for removing residual heat at both Units 5 and 6 through a tie line. This is because the metal-clad switchgear, and the air-cooled emergency DG(B) for Unit 6, which is installed in the emergency DG building and requires no sea water pump for cooling, escaped inundation. This indicates the importance of assuring not only redundancy but also diversity of equipment of especially high importance for safety, from the aspects of arrangements and operation methods.

It is known that Units 2 and 4 of Fukushima-Daiichi NPS are equipped with air-cooled emergency DGs in the common pool building but these units became inoperable as the metal-clad switchgear connecting the DG to an emergency bus line was inundated. This indicates that it is very important to pay close attention to securing of system diversity to eliminate common cause failures.

(3) Main factors that developed the events of accident

This accident resulted in serious core damage in Units 1 through 3 of Fukushima-Daiichi NPS. But Units 5 and 6 of Fukushima-Daiichi NPS and Units 1 through 4 of Fukushima-Daini NPS succeeded in cold shutdown without causing core damage. If any disturbance occurs in a plant during power operation, such as an event of loss of off-site power supply, the following three functions are required to shift the plant into the cold shutdown state; reactor sub-criticality maintenance, core cooling, and removal of decay heat from PCV. Figures IV-7-1 through IV-7-3 show function event trees indicating event sequences these plants followed. These function event trees develop event sequences headed by main functions, such as reactor sub-criticality maintenance, core cooling, removal of decay heat

from PCV, AC power, water injection to PCV, and hydrogen control, which were caused by the earthquake and accompanying tsunami and are considered to have seriously affected the progress of events before and after core damage. Estimated event sequences of this accident are shown by thick lines. Based on the above-mentioned event sequences, whether or not a unit suffered from core damage in this accident was mainly estimated by the following events:

a) AC power was not recovered early because:

- it was impossible to interchange electricity because of simultaneous loss of AC power for neighboring units,
- metal-clad switchgear and other accessory equipment were inundated due to tsunami, and
- off-site power supply and emergency DG was not recovered early.

b) Due to accident management carried out at the time of total AC power loss, core cooling was maintained for some time but was not sustained up until recovery of power supply.

c) The tsunami caused loss of functions of the system of transporting heat to the sea, which is the ultimate heat sink.

d) There was no sufficient means to substitute for the function of removing decay heat from PCV.

Next we evaluate whether or not regulatory guides established by the NSC Japan specify safety assurance measures against events that occurred or are estimated to occur in Fukushima-Daiichi NPS and Fukushima-Daini NPS as design requirements for nuclear power stations. If regulatory guides specify such design requirements, we further evaluate whether or not each nuclear power station was designed to satisfy the requirements. We also evaluate whether PSA took these events into consideration and whether or not the accident management, which had been developed by TEPCO under the accident management guidelines, functioned effectively.

1) Tohoku District - Off the Pacific Ocean Earthquake.

It has been confirmed that acceleration response spectra of seismic ground motions caused by this earthquake and observed in the basement of reactor buildings of Fukushima-Daiichi NPS exceeded the acceleration response

spectrum of the design basis earthquake ground Motion (DBEGM) Ss in the basement determined under the Regulatory Guide for Reviewing Seismic Design of Nuclear Power Reactor Facilities. However, damage caused by the earthquake was found in the off-site power supply system and no serious damage was found in safety-important systems and components in nuclear facilities. They were kept under control until the tsunami arrived, but detailed damage states are still unknown, requiring further investigations.

Back-check of seismic safety is being carried out for existing nuclear power reactors. Tsunami assessment was not covered in the interim reports submitted by TEPCO regarding Units 3 and 5 of Fukushima-Daiichi NPS and Unit 4 of Fukushima-Daini NPS. Reviews of tsunami were to be carried out later, though government agencies finished reviews of the earthquake. Assessment of residual risks was being carried out by licensees.

2) Loss of off-site power supply

Guideline 48 (Electrical Systems) of the Regulatory Guide for Reviewing Safety Design of Light Water Nuclear Power Reactor Facilities specifies that the external power system shall be connected to the electric power system with two or more power transmission lines. However, it did not give sufficient consideration on measures to reduce possibilities of common cause failures, for example, by using the same pylon for both lines.

On the contrary, events of loss of off-site power supply are taken as design basis events in the Regulatory Guide for Reviewing Safety Assessment of Light Water Nuclear Power Reactor Facilities. TEPCO installed at least two emergency DG for each unit, having a sufficient capacity to activate required auxiliary systems.

In the internal event PSA and the earthquake PSA, loss of off-site power supply is assessed as one of initiating events and induced events. The earthquake PSA did not sufficiently examine measures to prevent loss of off-site power supply in order to reduce occurrence of total AC power loss,

with the knowledge that total AC power loss is a critical event leading to core damage.

For example, no sufficient consideration was given to the following actions required for improving reliability of off-site power supply and auxiliary power system.

- Assessment to assure reliability of supplying power to nuclear power stations if a main substation stops supply
- Measures to improve reliability by connecting external power transmission lines to units at the site
- Seismic measures for external power lines (power transmission lines)
- Tsunami countermeasures for power receiving equipment in switching stations

Considerations should also have been given to measures to prevent metal-clad switchgear, storage batteries, and other power supply equipment from being inundated.

An assessment technique for tsunami accompanying earthquake (tsunami PSA) is under development now.

3) Tsunami

TEPCO voluntarily assessed the design tsunami height based on the largest tsunami wave source in the past by using the Tsunami Assessment Method established in 2002 by the Japan Society of Civil Engineers, and took such measures as raising the installation level of pumps and making buildings and other facilities water-tight, based on the assessment results. Nevertheless, the tsunami accompanying the earthquake was higher than the design tsunami height estimated by TEPCO. The design tsunami height at Fukushima-Daiichi NPS was estimated to be O.P. + 5.7 m based on the above-mentioned tsunami assessment method. But experts estimated that tsunami of 10 m or higher arrived, though no record of tide gauge readings was available as described in III 2(1). The design tsunami height at Fukushima-Daini NPS was estimated to be O.P. + 5.2 m. As described in III 2(2), neither record of tide gauge readings nor value estimated by

experts was available, and it is not sure how high the tsunami was. Nevertheless, it is considered that the actual tsunami height exceeded the design tsunami height. Documented procedures did not anticipate the ingress of tsunami, but specified only operation of stopping circulating water pumps used for cooling condensers as measures against undertow.

4) Loss of Total AC Power Supply

In the PSA referenced in deriving the level of the accident management system that has been established to date, no consideration has been given to the long-term functional loss of the emergency DGs and loss of the power supply interchange capability between adjacent nuclear reactors.

For the PSA concerning tsunami, assessment methods are under development at present, and trial assessments have been carried out as part of the method development. Such assessments recognized the importance of the above-mentioned functional losses including consideration of simultaneous functional losses of the emergency DG, metal-clad switchgear, etc. that are caused by tsunami, but never leading to reflection in the accident management system. In other words, the analysis of the threat that could cause such a situation was insufficient in considering measures against the total loss of the AC power supply.

In addition, as part of accident management, facilities are provided that ensure interchange of the power supply for the working-use AC power supply (6.9 kV) and low-voltage AC power supply (480 V) between adjacent nuclear reactor facilities, and the documented procedures for the facilities were specified. For Unit 1 through Unit 4 at Fukushima-Daiichi NPS, however, this accident management system did not function effectively since the adjacent units were also subject to the total loss of the AC power supply.

5) Securement of Alternative AC Power Supply (Power Supply Vehicle, etc.)

In the PSA referenced in deriving the accident management system that has been established to date, it was regarded that the probability leading to a serious accident would be sufficiently reduced by giving consideration to

the power supply interchange, recovery of the off-site power supply and the emergency DG. For this reason, the securement of a power supply vehicle, etc. was not considered as part of accident management.

This time, as an ad hoc applicable operation, a power supply vehicle was arranged to be carried in the site. But, this could not be utilized smoothly due to the difficult access caused by defects, etc., of the heavy machinery for removing rubble and debris generated by the influence of the tsunami, and water damage of a metal-clad switchgear that was also caused by the tsunami.

6) Securement of Alternative DC Power Supply (Temporary Storage Battery, etc.)

In the PSA referenced in deriving the accident management system that has been established to date, a mechanical failure of a storage battery has been considered, and a period of time during which the DC power supply must function has been defined as 8 hours in the event tree of the off-site power supply loss event. In consideration of the presence or absence of power supply recovery within 8 hours, if the off-site power supply fails to recover during this period, it is assessed that the RCIC system could not continue running. As a result, it was assessed that the off-site power supply might be more likely to recover, and loss of the DC power supply facilities would not be an event having a significant influence on the risk. Therefore, the preparation of temporary storage batteries was not a matter to be dealt with.

In this accident, arrangements were made for carrying the storage batteries in the site. But, since carry-in works were difficult and such work was performed in the dark due to the impact of the earthquake and tsunami disasters, difficulties arose in the recovery of the operation of the equipment following the accident, and the operation of the instrumentation system for recording plant parameters. Furthermore, the plant parameters that serve as important data in developing preventive measures after termination of the accident could not be sufficiently saved.

7) Measures Against Functional Loss of Seawater Pump (Loss of Ultimate Heat Sink)

In the PSA referenced in deriving the accident management system that has been established to date, the functional loss of a seawater pump has been considered in a fault tree related to loss of the residual heat removal capability, but no consideration has been given to the simultaneous functional losses of all the seawater pumps due to tsunami.

For the PSA concerning tsunami, assessment methods are under development at present, and trial assessments have been carried out as part of the method development. Such assessments indicated that the risk sensitivity of an event in which simultaneous functional losses of all the seawater pumps are generated due to tsunami was high. However, being a result of trial assessment, this was not shared widely among those involved, which never brought the importance of this accident management to their attention.

In this accident, as an ad hoc applicable operation, the measures were taken for replacing the seawater pumps suffering from functional losses with temporary seawater pumps, but this was not intended to be provided as part of the accident management.

8) PCV Vent

The PCV venting facilities were put in place as part of accident management before and after damage of the core. In the case of this accident, venting was performed after damage of the core due to depressurization of the reactors and the delay of water injection. Because of the total loss of the AC power supply, motor driven valves had to be opened manually for the PCV venting operations. For operation of pneumatically-actuated valves, the pressurized air required for operating such valves could not be assured, and thus a temporary air compressor had to be mounted to assure the pressurized air. For such reasons, the facilities could not be operated in accordance with the

documented operation procedures for severe accidents, which caused the PCV venting operation to be delayed.

9) Alternative Water Injection (Depressurization of Reactor Vessel, Alternative Water Injection Line)

The systems for alternative water injection, including depressurization operations of the reactors and the subsequent utilization of fire pumps, were put in place as part of the accident management. In this accident, depressurization and the subsequent cooling operations of the reactors were carried out using those systems. Due to the total loss of AC power supply, however, difficulties arose in assuring the air pressure for driving the SRV necessary for depressurization and maintaining the excitation of the electromagnetic valves in the air supply line, resulting in time-consuming depressurization operations. Alternative water injection into the reactors, using heavy machinery such as fire engines, was not considered as part of the accident management, but in this accident, as an ad hoc applicable operation, water injection into the reactor using a chemical fire engine that was present at the site was attempted. Nevertheless, since the reactor pressure was higher than the pump discharge pressure of the chemical fire engine, injection of freshwater into the reactor was not available in a few cases.

10) Alternative Water Injection (Water Sources)

As water sources used for alternative water injection, a condensate storage tank and a filtrate tank were considered as part of the accident management, and those tanks were practically utilized. As water sources utilized by a fire engine, a fire-prevention storage tank and seawater were used, but work was required to line up the water injection line.

11) Measures against Hydrogen Explosion at Reactor Building

The Guideline 33 (System for Controlling Containment Facility Atmosphere) of the Regulatory Guide for Reviewing Safety Design of

Light Water Nuclear Power Reactor Facilities requires the provision of functions capable of controlling the atmosphere of the containment facilities so as to ensure safety against assumed events. To meet this requirement, the FCS was installed at BWR plants along with inactivation inside the PCV. No requirements are specified for measures against hydrogen explosion at the reactor building. Also, the Common Confabulation Interim Report which deals with "beyond design basis events" does not describe such requirements.

The PSA includes a scenario in which hydrogen arising from meta-water reaction following core damage, and from the radiolysis of water, leaks from the PCV into the reactor building filled with the normal air resulting in burning inside the reactor building in a severe accident, but this is an assessment from a viewpoint of the integrity of the PCV, and no discussions were made for damage to the reactor building.
It was expected that the FCS installed to cope with the design basis events would be available under the severe accident environment as well. But, since power supplies were not available this time, this capability was not utilized.

For measures against a hydrogen explosion at the reactor building, no consideration was given to the facilities or the documented procedures.

12) Alternative Water Injection into Spent Fuel Pool and Cooling

The Guideline 49 (Fuel Storage Facilities and Fuel Handling Facilities) of the Regulatory Guide for Reviewing Safety Design of Light Water Nuclear Power Reactor Facilities requires a system capable of removing the decay heat and transfer it to the sea, the ultimate heat sink, in the spent fuel pool. However, there are no requirements for the capability to perform alternative water injection in preparation for the case of loss of ultimate heat sink. As it is considered that the risk presented by the spent fuel pool is sufficiently smaller compared to the reactor, there are fewer PSA implementation examples for the spent fuel pool. In the PSR at Unit 1 of Fukushima-Daiichi NPS that was published in March 2010, the PSA was implemented for the

spent fuel pool when all of the fuel rods in the reactor were taken out into the spent fuel pool. But, since the risk was thought to be small, no consideration was given to the facilities or documented procedures related to the injection of seawater into the spent fuel pool.

13) Water Injection into D/W for Cooling Reactor or PCV

Further, in addition to installing alternative capabilities, as part of the accident management for water injection into the space of a foundation (pedestal) supporting the RPV in the D/W, TEPCO put the capability to perform water injection using the same piping as the alternative spray capability in place.

The PCV pressure increased in Unit 3 during this time. For depressurization, spray to the S/C was used, and it was confirmed that the accident management system functioned properly. In units 1 and 2, the PCV vent was superseded, and thus the PCV spray (D/W and S/C) was not performed.

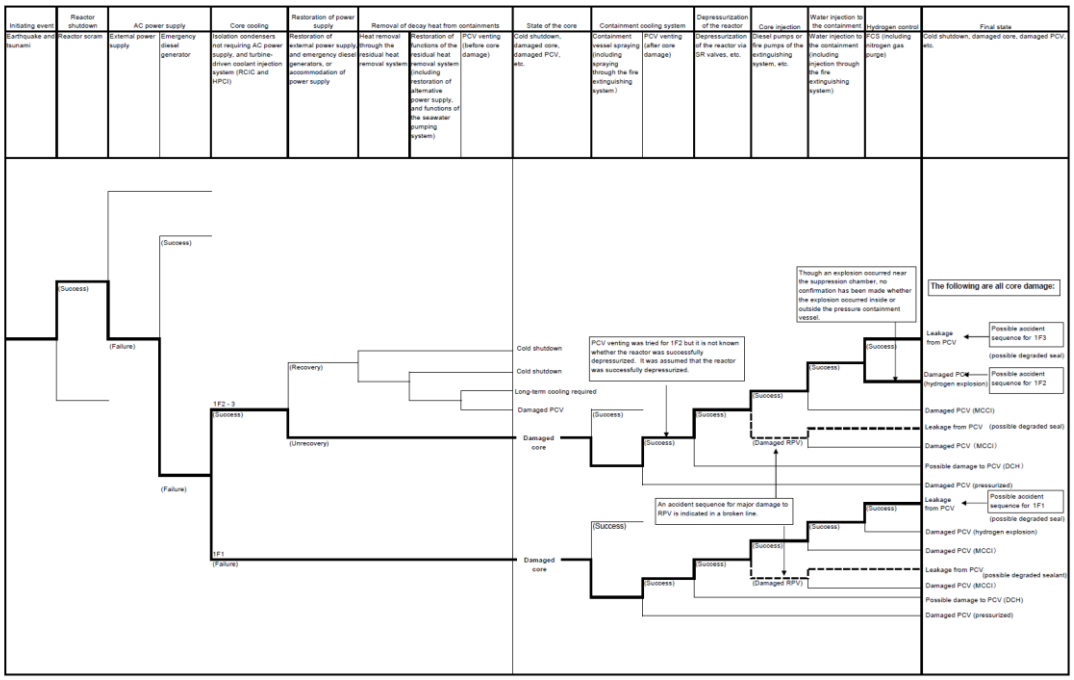


Figure IV. 7-1: Function event tree for units 1, 2 and 3 of Fukushima-Daiichi Nuclear Power Station

Figure IV-7-1 Function Event Tree of Unit 1 to Unit 3 at Fukushima-Dai-ichi NPS

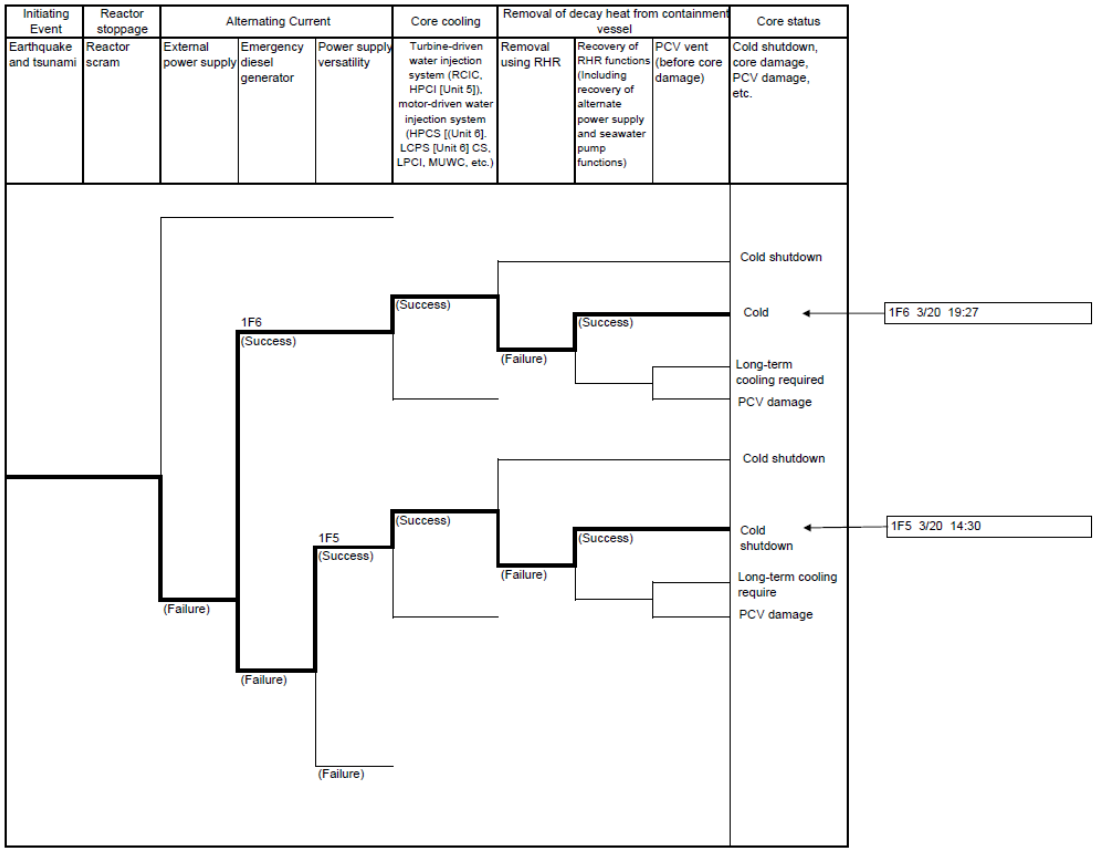


Figure IV-7-2 Function Event Tree of Unit 5 and Unit 6 at Fukushima-Dai-ichi NPS

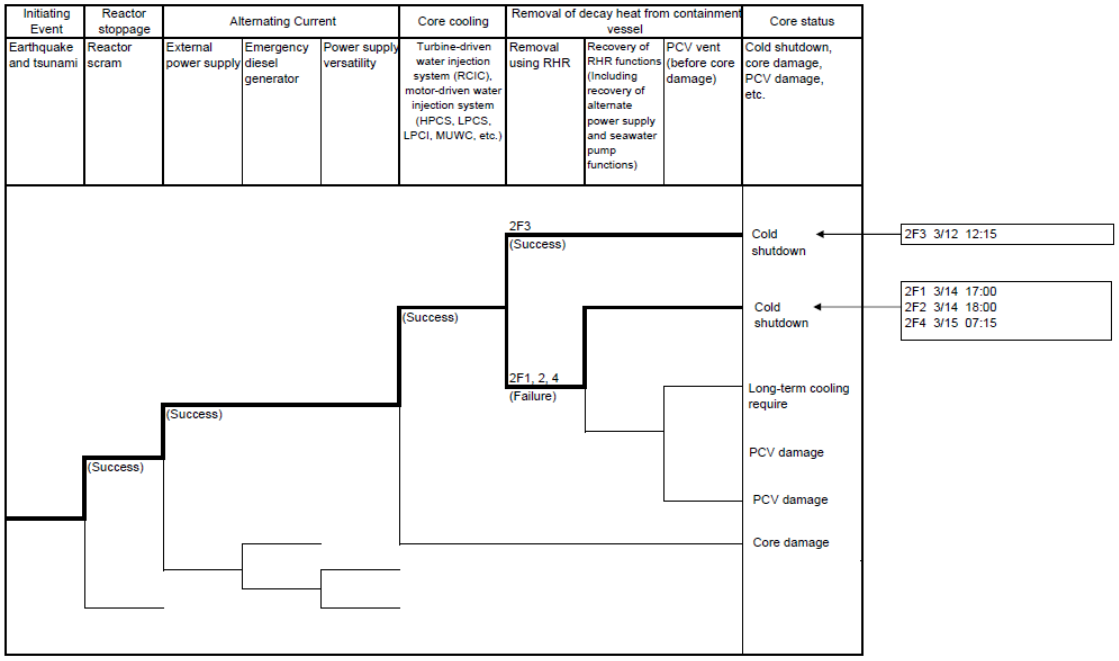


Figure IV-7-3 Function Event Tree of Unit 1 to Unit 4 at Fukushima-Dai-ni NPS

(4) Comprehensive Assessment

1) Conception for tsunami in design stage.

Tsunami Evaluation Group, Nuclear Engineering Committee, Japan Society of Civil Engineers announced in 2002 the "Tsunami Assessment Method for Nuclear Power Plants in Japan"[IV7-1] which established a deterministic tsunami water level evaluation method, triggered by the Hokkaido south-west offshore earthquake which took place in 1993. This characterizes, in setting up design basis tsunami, a consideration of tsunami of which the occurrence in the past was accurately confirmed, as well as a requirement of a method to address uncertainty (variation), accompanied during the course of setting a proper method. Based on this, each licensee voluntarily reviewed the design basis, and the Nuclear Power governmental agency was not involved in this review.

Incidentally, the Regulatory Guide for Reviewing Seismic Design of Nuclear Power Reactor Facilities finalized in 2006 specifies in "8. Consideration for the event accompanied by an earthquake" that "During the service period of the facilities, safety features in the facilities might not be significantly affected even by such a tsunami that could likely to occur on very rare occasions," and the guideline asks for proper design for such a assumed tsunami.

The massive tsunami of last March made it clear that an earthquake or tsunami could cause multiple common cause failures of equipment of safety significance in a nuclear power plant.

For that reason, considering the risk that may be caused by an attack on facilities by tsunami beyond assumed design basis tsunami, from now on, it is required to make efforts to reduce the risk to a level as low as reasonably attainable.

On the other hand, Tsunami Evaluation Group, Nuclear Engineering Committee, Japan Society of Civil Engineers has initiated compiling a

detailed work for "a method to analyze tsunami hazard using probability theory (Draft), while recognizing that a sufficient safety level in a nuclear power plant facility cannot always be attained against an earthquake or tsunami which could cause multiple common cause failures, even after providing design measures against a presumed earthquake or tsunami."

Meantime, the Nuclear and Industrial Safety Agency (NISA) conducted back checks based on the most recent findings for all of the existing nuclear power plants under the Regulatory Guide for Reviewing Seismic Design of Nuclear Power Reactor Facilities revised based on the information given by the Nuclear Safety Commission. In Fukushima-Daiichi Nuclear power plants No.3 and No.5, an interim report was prepared which has been reviewed by NISA. However, any evaluation relating to tsunami and any remaining risk were left to be made later. From this it is pointed out that the persons in charge had little understanding of designs against tsunami, and that a deterministic approach will never guarantee that a tsunami exceeding the predicted strength will not occur. But, for the responsibility of attaining the targeted safety level (safety goal), they are required to prepare proper design measures and accident management taking the (target) safety level into consideration after analyzing the characteristics of the plant against the attack of an unexpected tsunami exceeding the predicted safety level, .

Background shows that the nuclear regulatory agency supposedly did not have an attitude to translate the standard of "constitute no hindrance to disaster prevention" which was expected in society as a standard of judgment into "Target Safety Level" which was commonly owed to society, nor an attitude to establish a dialogue with society over whether it is adequate or not.

2) Guidelines for accident management

Since the guidelines for accident management were established by the Nuclear Safety Commission in 1992, accident management was prepared at each nuclear power plant over ten years.

Such accident management based on PSA and an analysis of scenarios involving internal events caused by equipment failure and human error conducted in 80's. This guideline was highlighted to emphasize the effectiveness of introducing accident management, and failed to focus on the environmental conditions so as to make accident management effectiveness.

So, the nuclear regulatory agency should have mandated the licensees that the results of PSA in relation to new findings of common cause failures and external events be referenced and training under realistic conditions be periodically implemented at the stage on which equipment and materials provided for accident management are arranged for training. Further, this guideline also should have been revised taking the experience of such efforts and the results of earthquake PSA and tsunami PSA into consideration.

However, accident management was considered to be conducted independently by each licensee and did not require a PDCA system for introducing new findings or improvements. Also, the Nuclear Safety Commission has never reviewed the accident management system.

Taking into account the importance of the role that accident management has for achieving the safety goal, the nuclear regulatory agency should have constantly reviewed the accident management guidelines by introducing new findings for effective operation.

The Fukushima-Daiichi Nuclear Power Station attacked by a large tsunami has six reactor facilities at one site and all the reactors have suffered accidents. Despite the multi-plant attributes, the accident management guidelines did not address these attributes and the licensees did not train for these attributes.

3) Diversity to important systems in safety: Preparation for commonly caused faults

The accident this time was characterized by having a lot of electrical machinery and appliances in the significant safety systems, including a metal-clad switchgear for connecting to an emergency DG and an emergency bus bar, inundated and becoming useless after the arrival of the tsunami, which resulted in the loss of final heat sink Further, some plants lost their direct-current power source, leading to severe accidents. Namely, water supply to the nuclear reactor by using a fire fighting system maintained to use in good condition for accident management, or PVC vents, did not function immediately due to malfunctions of a pump, a solenoid valve, an air operated valve (AO valve), etc.

On the other hand, a part of the steam-driven system, such as the RCIC continued to cool the reactor core beyond eight hours and only until the battery was exhausted. An emergency DG installed at a higher level worked satisfactorily since the body of the emergency DG and its power source were free from submersion.

Beyond Design Basis Accidents (BDBE) are likely to be due to multiple failures of important facilities caused by earthquake, tsunami, fire, etc. Therefore, in order to limit the occurrence of Beyond Design Basis Accidents (BDBE) and the influences exerted by it, some good ideas are essential to convert or modify a plant to comply with such severe conditions caused by such external events. Also for the preparation of such accident management to work effectively under such severe conditions, some method to avoid simultaneously occurring malfunctions of the facilities is needed.

Therefore, the Nuclear Power governmental agency should have emphasized the necessity of insuring a diversity of facility installation sites, power sources and support systems, from the view point of minimizing the possibility of common cause failures together with water, vibration and sufficient protection against fire. Also, for the accident management of licensees to install a nuclear power plant, training should have been required to ensure that accident management should work

effectively under the severe conditions in mind, and reviewing its effectiveness should also have been required.

4) Design pressure of PCV and vent system.

As the loss of PCV functions due to an accident will provide a direct adverse effect on the surrounding environment, the soundness of the PVC should be maintained even when multiple malfunctions, such as those in the Fukushima-Daiichi power plant, occurs. For this purpose designed temperatures and pressures should be determined in consideration of the occurrence of core damage. At the same time a vent system to be free from damage by emergent excess pressure should be kept in good condition as part of accident management. Judging from the accident this time, the radiation level adjacent to the PCV increased after the core was damaged.

From this the vent system should have been remotely controllable even when AC power source was lost. The PCV vent system should have been equipped with a filter with sufficient radiation decontamination capability. Since temperature and pressure are possibly routed, in the occurrence of core damage, through a system connecting to the PCV vent line, the common use of the system should be minimized as much as possible so as to avoid the leakage of hydrogen or radioactive substances from the building. Further, special attention to design allowances in pressurized equipment for continuous parts, or apparatus sealed by packing, should have been taken so that no leakage would occur in the liquid layers even when the designed pressure is exceeded.

5) Hydrogen explosion in nuclear reactor building.

In the accident this time, a hydrogen explosion in the nuclear reactor building had greatly impeded actions to resolve the situation. In the BWR plant as a countermeasure to the hydrogen explosion, all eyes were focused on activation and installation of the FCS in the PCV. This was considered effective even after the core was damaged. This time the generation of hydrogen was contained to some extent, but while paying attention to the

loss of the power source and fixing it, hydrogen leaked from a pressurized PVC exploded in Fukushima-Daiichi Nuclear power plants No.1 and No.3. In Fukushima-Daiichi Nuclear power plant No.4, an explosion is supposed to have occurred due to an inflow of hydrogen from the PCV vent in Fukushima-Daiichi Nuclear power plant No.3.

From this, for accident management after the occurrence of core damage, ventilation facilities to prevent an explosion in the nuclear reactor building due to hydrogen leakage from the PCV, and some measures of equipment to prevent the collection of hydrogen should have been provided, including an independently-driven power source.

6) Risks relating to the spent fuel pool

In this accident, the cooling function for the spent fuel pool was lost due to a loss of power supply. Notably, because of reactor core internal shroud replacement work at Fukushima Daiichi Nuclear Power Station, Unit 4, there was one reactor core's worth of fuel with relatively high levels of decay heat being stored. As well as dealing with the accident in terms of the reactor core, it also became necessary to quickly carry out measures to introduce an alternative cooling function for the spent fuel pool.

However, as the embedded radioactive inventory is low compared to the reactor core, even though the radioactivity containment function is inferior to that of the reactor core, a definitive decision was made that there was only a small possibility of risks originating from the spent fuel pool, and as such, no particular accident management was considered.

7) PSRs and PSAs

Since 1992, PSRs, that evaluate the overall safety of existing nuclear plants based on the latest technological knowledge, have been carried out as a voluntary security measure by the licensees approximately every 10 years. One of the items in the PSR is to carry out a PSA, and to come up with measures to deal with the results of the assessment. Reviews on the

appropriateness of these actions have been carried out by the nuclear regulatory authorities.

However, during the review of the PSR carried out in 2003, other requirements were made operational safety program requirements based on the Reactor Regulation Act, while the PSA remained at the discretion of the licensees, and reviews by nuclear regulatory agency ceased to be carried out. PSAs make known the risk structure that is subject to regulations for risk management for the people, and the nuclear regulatory authorities were somewhat lax in managing quality, in having the licensees carry out PSAs, and in using those results to make regulatory decisions. As a result, there was ambiguity in distinguishing what is significant and what is not significant in achieving the required safety standards. This may have led to deterioration in nuclear safety culture.

The nuclear regulatory agency should have considered it their mission to act on the people's behalf to investigate whether the risks at nuclear reactors were being kept to a minimum and to provide explanations. They should have had the licensees evaluate internal and external risks of each plant and enforce appropriate accident management based on that. This should have then been reviewed and enhanced based on the latest knowledge.

8) Effects of ageing

Data acquired from surveys on equipment operation following the earthquake and the intensity of the shaking showed no there had been no effect on important safety related equipment and devices in the reactor. As such, it is thought that the accident was not caused directly by deterioration due to ageing (embrittlement of the reactor, cyclic fatigue, pipe damage, heat ageing, cable deterioration, etc.), but instead was caused largely by insufficient cooling of the reactor, or a halt in cooling of the reactor, resulting in damage to one of the reactor cores and core melt.

In addition, it is necessary to examine in detail from now on whether the reactor systems were vulnerable to such an earthquake and tsunami

because of their age. Through PSRs, mentioned above, or by other means, such factors should be investigated thoroughly and, where necessary, safety systems and equipment renewed or upgraded.

9) Environments for dealing with accidents

It is clear that at the time of the accident poor habitability of the main control room and inadequacies in accident clocking devices led to delays in making operational decisions. This stems from the fact that a prolonged loss of AC power supply was not considered as a design standard, and was also not considered as part of accident management.

In the future, for accident management to be effective against prolonged losses of AC power supply, stipulations should have been made on maintaining the habitability of the main control room and surrounding routes following damage to the reactor core. Stipulations should also have been made on ensuring the reliability of instrumentation and a stable direct current power supply to run such instruments if an accident occurs.

In addition, for twin plants with a common main control room, or where plants are adjacent to each other, accidents at the adjacent plant should have been considered as external factors affecting the plant. In the same way, it should also have been a requirement to ensure the necessary habitability for continued operation at the adjacent plant.

Such requirements also are also applicable for on site emergency stations.

When the accident occurred and operators from the main control room took shelter, the on site emergency station became the plant's main means for assessing the situation at the plant. But, poor habitability hampered work to swiftly implement accident management. In consideration of such events, in order to enable accident management to be carried out effectively even in difficult accident environments, detailed investigation should have been carried out into creating emergency stations with all the necessary

requirements, including dedicated ventilation and air conditioning systems.

Following damage to the emergency station at the Kashiwazaki Kariwa Nuclear Power Station during the Niigataken Chuetsu-oki Earthquake in July 2007, an independent decision was made at the Fukushima Daiichi Nuclear Power Station to make its emergency station earthquake-proof. It can be said that this measure was of benefit during the earthquake. Investigation should be carried out to determine whether it is necessary to make such functions a regulatory requirement at other nuclear power stations' on site emergency stations as well.

10) Reactor building requirements

One of the difficulties hindering restoration efforts following this accident is the fact that the damaged section of the PCV is positioned low down. Water injected into the nuclear reactor is leaking out into the turbine building, as much electrical conduit and piping runs through the lower levels of the reactor building, and these sections are not water-proofed. As flooding can be considered as a factor of accident management, it would have been advisable to ensure that the lower sections of the nuclear reactor building were water-proof as a measure against flooding and to ensure external cooling of the PCV could be carried out.

In addition, in light of the fact that the presence of ground water is hindering the management of contaminated water, accident management activities should have included investigations into the detrimental effects caused by ground water, and measures such as positioning important sections of the reactor above ground water level or siting the building on premises with water shielding should have been taken.

11) Independence from adjacent plants

One of the difficulties hindering restoration efforts following this accident is the fact that there are underground connections to adjacent plants

through which contaminated water runs. Although it is more economically efficient to construct plants adjacent to each other so that facilities and control can be shared, it is important to ensure that the detrimental effects of an accident at one plant can be kept isolated from the adjacent plant. As such, investigation should have been carried out to plan the physical separation of adjacent plants or to make it possible to plan the physical separation of adjacent plants.

# V. Response to nuclear emergency

## 1. Emergency response after the accident occurred

### (1) Establishment of organizations and instruction for evacuation etc.

#### 1) Initial response etc. pursuant to the Act on Special Measures Concerning Nuclear Emergency Preparedness

At 15:42 on March 11, the Ministry of Economy, Trade and Industry (METI) in charge of safety regulations of nuclear power plants received a report from a nuclear operator pursuant to Article 10 of the Special Law of Emergency Preparedness for Nuclear Disaster (Total loss of AC power during operation) and the Nuclear Emergency Preparedness Headquarters and the On-site Headquarters were established.

At 16:00 on the same day, the Nuclear Safety Commission of Japan (NSC Japan) held an extraordinary meeting and decided to organize an Emergency Technical Advisory Body.

At 16:36 on the same day, in response to the report as of 15:42 pursuant to the provisions of Article 10 of the Act on Special Measures Concerning Nuclear Emergency Preparedness, The Deputy Chief Cabinet Secretary for Crisis Management established Emergency Response Office for the nuclear accident at Prime Minister's Office.

At 19:03 on the same day, the Prime Minister declared the state of nuclear emergency and established the Nuclear Emergency Response Headquarters and the On-site Nuclear Emergency Response Headquarters.

Other ministries and agencies established organizations to respond to the emergency.

#### 2) Identifying current status of the emergency incidents

Regarding the terminals of Emergency Response Support System (ERSS), which monitors status of reactors and forecasts progress of the accident in a nuclear emergency, errors occurred in the data transmission function of the system right after the occurrence of the accident. Therefore, necessary information from the plant could not be obtained and the primary functions of the system could not be utilized.

Regarding the System for Prediction of Environmental Emergency Dose Information (SPEEDI), which quickly predicts atmospheric concentration of radioactive materials and radiation dose in the surrounding area in an emergency situation when a large amount of radioactive materials is or might be released from reactor facilities, Ministry of Education, Culture, Sports, Science and Technology (MEXT) instructed the Nuclear Safety Technology Center at 16:40 on March 11, to shift SPEEDI to emergency mode as specified in the Basic Disaster Prevention Plan. The SPEEDI forecasted distribution of gamma radiation dose rate (absorbed dose in the air) of radioactive noble gas on the ground and temporal variation of concentration distribution of radioactive iodine in the air under the assumption that release of 1 becquerel (Bq) of radioactive noble gas or iodine per hour continues.

SPEEDI normally calculates forecast data by inputting the release source information comprised of radiation monitoring data transmitted from reactor facilities, meteorological conditions provided by the Meteorological Agency and topographical data, primary functions of this system. However, it did not conduct quantitative forecast of atmospheric concentration of radioactive materials and air dose rate because release source information through ERSS could not be obtained in this accident.

Operational process of SPEEDI has been partially reviewed at the initial response of this accident as follows.

The terminals of SPEEDI governed by MEXT are located in MEXT, NISA, NSC Japan, Local Nuclear Emergency Response Headquarters (hereinafter referred to as “Local Headquarters”) and Fukushima prefecture. Also, staff of Nuclear Safety Technology Center who operates the system was assigned to NISA and MEXT. On the other hand, staff of Nuclear Safety Technology Center was not assigned to NSC Japan because it had to request calculation by SPEEDI to the Nuclear Safety Technology Center through MEXT when NSC Japan needed such calculation.

On March 16, after roles and responsibilities of each ministry were realigned, MEXT became responsible for controlling the implementation of environment monitoring and publicizing the results. NSC Japan became responsible for evaluating monitoring information etc. MEXT also instructed the Nuclear Safety Technology Center to facilitate analysis using SPEEDI by NSC Japan and dispatched staff of the Nuclear Safety Technology Center to the Secretariat of NSC Japan. This enabled NSC Japan to directly

request staff of the Nuclear Safety Technology Center for estimation.

3) Establishment of the Local Nuclear Emergency Response Headquarters and relocation of the headquarters to Fukushima prefectural office

On March 11, staff of Fukushima Dai-ichi Nuclear Safety Inspector's Office in charge of Fukushima Dai-ichi NPS were on duty for operational safety inspection, excluding a part-time clerk working at the office. After the quake occurred, three office staff including the Office Manager returned to the Off-site Center, around 5 km west of the NPS, and the remaining 5 nuclear safety inspectors stayed at the NPS to collect information.

At 15:42 on March 11, the Local Nuclear Emergency Preparedness Headquarters was established at the Off-site Center as soon as receiving a notification pursuant to the provisions of Article 10 of the Act on Special Measures Concerning Nuclear Emergency Preparedness. Subsequently, Local Nuclear Emergency Response Headquarters was established after the occurrence of emergency incidents pursuant to the provisions of Article 15 of the same Act at 19:03 on the same day. The head of the Nuclear Safety Inspector's Office temporarily acted for the head of the headquarters until the Vice Minister of METI arrived pursuant to the provisions of Nuclear Emergency Response Manual.

However, in addition to blackout due to the earthquake, power was lost due to malfunctions of emergency power source and no communication tools were available at the Off-site Center. Therefore, the head and other staff had to move temporary to the neighboring Environmental Radioactivity Monitoring Center of Fukushima, where they use the satellite phone installed in the building to secure external communication.

The Vice Minister of METI in charge of the Local Headquarters immediately departed for the Off-site Center with staff of NISA and Secretariat of NSC Japan from Ministry of Defense (MOD) by helicopter of SDF etc. at 17:00 on March 11 pursuant to the occurrence of emergency situation prescribed in Article 15 of the Act on Special Measures Concerning Nuclear Emergency Preparedness and arrived at the Environmental Radioactivity Monitoring Center of Fukushima at 0:00 on March 12. Around the same time, staff of the MEXT arrived separately. From the evening of March 11 to the next day, officials and staff of SDF, Fukushima Prefecture including Vice Governor, Japan Atomic Energy Agency (JAEA) and National Institute of Radiological Sciences and others arrived. However, the initial mobilization of staff and specialists of relevant ministries and agencies originally

expected as members of the local headquarters was generally slow. In addition, the person in charge in NSC and the member of the Emergency Response Investigation Committee were not dispatched immediately to the site, as specified in the Basic Disaster Prevention Plan. The earthquake occurred earlier and other reasons seem to have affected the mobilization.

After the emergency power supply of the Off-site Center was recovered and satellite communication system among various communication systems became available, operation of the Local Headquarters became available at the Off-site Center again at 3:20 on March 12.

The head of the Local Headquarters directed the heads of relevant local governments to identify the evacuation status, give publicity to local residents, prepare for potassium iodide and conduct emergency monitoring, screening and decontamination etc. as the activities at the Off-site Center during this time.

Information from the power stations, ERSS, SPEEDI and others was not desirably available at the Off-site Center for some period of time. Subsequently, with high radiation dose due to the progress of nuclear emergency and lack of fuel, food and other necessities due to congested transportation around the site, it became difficult to continue effective operation at the Off-site Center as the Local Headquarters.

Alternative facilities are required to be prepared for such a case pursuant to the provisions of the Act on Special Measures Concerning Nuclear Emergency Preparedness. Minami-soma City Hall originally selected as an alternative location for the Off-site Center was already used as a place for responding to the earthquake and tsunami disaster.

After rearranging an alternative facility of the Off-site Center, the Local Headquarters was moved to Fukushima Prefectural Building on March 15.

4) Initial operations of environment monitoring

The Basic Disaster Prevention Plan specifies, “In light of evaluating effect to the surrounding are of released radioactive materials or radiation from nuclear facilities in the event of an emergency and based on the guideline established by the Nuclear Safety Commission, local governments are to improve emergency monitoring process including

developing emergency monitoring plan, installing and maintaining monitoring posts and secure monitoring personnel…" and "…after the state of nuclear emergency is declared, local governments are to gather emergency monitoring results including information from relevant organizations and communicate with staff dispatched to the emergency response facilities."As is provided, local governments are responsible for implementing and managing emergency monitoring.

The background of the idea that "the local government is responsible for environment monitoring," is that because local governments have more information of residents' situation and on geography of each municipality, it would be more suitable to implement evacuation and guidance etc. of residents than the national government.

In Fukushima Prefecture, the prefectural government personnel gathered together during this accident and started conducting emergency monitoring activities together with relevant authorities. However, it was quite difficult for Fukushima Prefecture to implement sufficient environment monitoring activities because unexpected events occurred. For example, equipment and facilities of Fukushima Prefecture were damaged by the earthquake and tsunami and affected by blackout; the local government itself had to take disaster response measures against widely-spread damage of earthquake and tsunami; and the Local Nuclear Emergency Response Headquarters was relocated from the Off-site Center to Fukushima Prefectural office, as mentioned before.

MEXT dispatched monitoring cars from a major nuclear emergency prevention facility in Ibaraki prefecture, bordering Fukushima prefecture, to the Off-site Center near the NPS as the first dispatch (two owned by MEXT and one by JAEA) and to Fukushima City, where Fukushima prefectural office is located, as the second dispatch (two owned by MEXT and two by JAEA).

Initial response to environment monitoring was limited because relevant ministries and agencies which are responsible for implementing and supporting monitoring as provided in the Basic Disaster Prevention Plan, were engaged in other disaster response measures such as searching for missing people.

The first environmental radiation monitoring conducted on March 13 was announced by NISA at 7:30 on March 14, and it observed higher than 30 μSv/h in some area.

.

From 20:40 to 20:50 on March 15, environment monitoring at 3 locations by a monitoring car travelling around Namie Town, 20 km northwest of Fukushima Dai-ichi NPS, detected maximum of 330 μSv/h outside of the car. This data was announced by MEXT at 1:05, March 16.

High level radioactive iodine and radioactive cesium were detected on March 15, from sampled topsoil and plants. As the area where radioactive plume reached would presumably continue to have high radiation dose rate and high concentration, NSC Japan proposed to conduct monitoring of milk, drink water and agricultural products earlier at a conference with emergently gathered team at Prime Minister's office.

During this time, although MEXT dispatched monitoring cars, due to the impact of the earthquake on roads and the progress of the disaster event in the reactor facilities, etc., the Local Nuclear Emergency Response Headquarters was unable to conduct sufficient monitoring activities.

Under these circumstances, roles and responsibilities within the government were realigned and MEXT became responsible for managing implementation of environment monitoring and publicizing the results. Since 1:05 of March 16, environment monitoring results have been announced daily by MEXT. NSC Japan also requested MEXT through the Nuclear Emergency Response Headquarters to locate cumulative dosage measurement at a certain location (Point 32) or increase frequency of measurement there because higher than 100 μSv/h had been detected for 2 consecutive days since 16:00 of March 17, which was publicized in "Regarding monitoring results beyond 20 km from Fukushima Dai-ichi NPS" by MEXT. (March 18)

5) How evacuation area and "stay in-house" area were determined

a. Instruction regarding Fukushima Dai-ichi NPS

At 20:50 on March 11, the Governor of Fukushima Prefecture instructed residents of Okuma Town and Futaba Town and others within 20 km radius from Fukushima Dai-ichi NPS to evacuate.

The Director-General of the Nuclear Emergency Response Headquarters (Prime Minister)

issued instruction to the heads of Fukushima Prefecture, Okuma Town, Futaba Town, Tomioka Town and Namie Town pursuant to the provisions of the Act on Special Measures Concerning Nuclear Emergency Preparedness. This instruction was to evacuate the residents and others within 3 km radius from Fukushima Dai-ichi NPS and order the residents and others within 10 km radius from the NPS stay in-house. Responding to the situation that one of the reactors has not been cooled, these evacuation instructions were provided to prepare just in case for such situation to continue.

At 5:44 on March 12, the f the Nuclear Emergency Response Headquarters instructed residents within 10 km from the NPS who were originally instructed to stay in-house to evacuate to outside of the evacuation area. This instruction was issued because the pressure in the Primary Containment Vessel (PCV) could possibly be increased.

At 18:25 on the same day, responding to an explosion at Unit 1 of Fukushima Dai-ichi NPS and the related emergency measures etc., the Director-General of the Nuclear Emergency Response Headquarters issued a new instruction to the heads of relevant municipalities, which include Fukushima Prefecture, Okuma Town, Futaba Town, Tomioka Town, Namie Town, Kawauchi Town, Naraha Town, Minamisoma city, Tamura city and Katsurao Village. This instruction is to evacuate the residents within 20 km radius. It was issued to prepare for any possible risks which would occur simultaneously at multiple reactors including the Units other than Unit 1.

From March 12 onward, various incidents at multiple units occurred including explosions which appeared to have been caused by hydrogen at Units 1 and 3 on March 12 and 14 respectively, an explosion incident and smoke at Unit 2 and an explosion and a fire at Unit 4 on March 15. At 11:00 on March 15, in light of taking all possible measures, the Director-General of the Nuclear Emergency Response Headquarters issued an instruction to the heads of relevant local governments including Fukushima Prefecture, Okuma Town, Futaba Town, Tomioka Town, Namie Town, Kawauchi Town, Naraha Town, Minamisoma City, Tamura City, Katsurao Village, Hirono Town, Iwaki City and Iitate Village. The instruction is to order residents within radius between 20 km and 30 km from Fukushima Dai-ichi NPS to “stay in-house.” (Lifting the instruction to “stay in-house” will be mentioned below.)

b. Instructions to Fukushima Dai-ni NPS

At 5:22 on March 12 and onward, a nuclear emergency of losing pressure-control function in multiple units of Fukushima Dai-ni NPS occurred. The Prime Minister declared the state of nuclear emergency pursuant to the provision of the Act on Special Measures Concerning Nuclear Emergency Preparedness at 7:45. (Note: Simultaneously with the declaration of the state of nuclear emergency, the Nuclear Emergency Response Headquarters and the Local Headquarters for Fukushima Dai-ni NPS were established, and then they were integrated into those of Fukushima Dai-ichi NPS. As a result, the Prime Minister became the Director-General of both the Nuclear Emergency Responses Headquarters for both Fukushima Da-ichi and Dai-ni NPSs.)

The Director-General of the Nuclear Emergency Response Headquarters also instructed the residents and others within 3 km radius from Fukushima Dai-ni NPS to evacuate, and ordered the residents and others within 10 km radius from Fukushima Dai-ni NPS to stay in-house. The relevant local governments include Fukushima Prefecture, Hirono Town, Naraha Town, Tomioka Town and Okuma Town.

At 17:39 on the same day, responding to the explosion at Unit 1 of Fukukshima Dai-ichi NPS, the Director-General of the Nuclear Emergency Response Headquarters instructed the residents and others within 10 km radius from Fukushima Dai-ni NPS to evacuate. Those who were instructed to evacuate was originally instructed to stay in-house.

On April 21, the Director-General of the Nuclear Emergency Response Headquarters issued an instruction to the heads of local governments to change the evacuation area to within 8 km radius from Fukushima Dai-ni NPS. The relevant local governments include Fukushima Prefecture, Hirono Town, Naraha Town, Tomioka Town and Okuma Town. This instruction change was issued based on the judgment that risks of serious accidents have been considerably reduced from the time when the state of nuclear emergency was declared at 7:45 on March 12 and certain safety measures have been taken since then.

The Director-General of the Nuclear Emergency Response headquarters changed the instruction on the instruction on the evacuation area after hearing the opinions of the Nuclear Safety Commission pursuant to the provisions of Article 20 (5) of the Act on Special Measures Concerning Nuclear Emergency Preparedness. (Please refer to Appendix V-1 for “evacuation instruction by the Director-General of the Nuclear Emergency Response HQs” etc.)

c. Communication channels and status of evacuation instruction

In the initial stage of the accident, the Director-General of the Nuclear Emergency Headquarters determined the evacuation area and instructed evacuation in order to ensure the safety of the residents and others as soon as possible. After such instructions were issued, the Administration of the Nuclear Emergency Response Headquarters called the On-site Headquarters and Fukushima Prefecture to deliver evacuation instructions and "stay in-house" instructions, and relevant municipalities received calls on such instructions through the On-site Headquarters and Fukushima Prefecture. Additionally, the Nuclear Emergency Response Headquarters directly called those local governments. However, because communication services including telephone lines were heavily damaged by the great earthquake, not all the direct calls reached the relevant local governments. Advance notice to local governments was not satisfactorily delivered. On the other hand, the police communicated the evacuation instruction to the local governments using police radio. Furthermore, in order to swiftly convey the evacuation instruction to residents, they used police vehicles such as patrol cars to inform the public and guided the residents in the evacuation process. In order to promptly communicate the evacuation instructions, the Chief Cabinet Secretary held press conferences to announce the instructions immediately after they were issued and mass media such as television and radio were fully utilized. Actual evacuation was promptly conducted by relevant local governments, police and local residents, etc.

6) Responses of national and local governments after evacuation and "stay in-house" instructions

a. Overview of evacuation area etc.

The population of the evacuation area (within 20 km radius from Fukushima Dai-ichi NPS and 10 km radius from Fukushima Dai-ni NPS), where instructions was issued by March 15, was approximately 78,200 and that of "stay in-house" area (between 20 km and 30 km radius from Fukushima Dai-ichi NPS) was approximately 62,400. (Source: Flash report of National Census of 2010)

At 23:30 on March 15, NISA announced that evacuation of the residents out of 20 km radius from Fukushima Dai-ichi NPS and 10 km radius out of Fukushima Dai-ni NPS had already been implemented.

b. Responses of national and local governments after instructions are issued

In addition to residents who follow evacuation and “stay in-house” instructions issued by the local governments, some residents who were instructed to stay in-house voluntarily evacuated from their home. The situation of the “stay-in-house area” was as follows: The number of residents who wish to voluntarily evacuate was increasing, it became more difficult to maintain social life due to stagnant business and distribution etc. and evacuation instruction could also be issued in such zones with increased radiation dose depending on the future progress of the plant situation. Based on the situation, the Government recognized the necessity of actively providing life support with goods like gas, food and medicines and encouraging voluntary evacuation for residents in “stay in-house” area as well as accelerating preparation for the future issuance of evacuation instruction in such area. On March 25 at the press conference, the Chief Cabinet Secretary encouraged the relevant local governments to voluntarily evacuate residents and be ready for taking appropriate measures promptly when evacuation instruction is issued.

Evacuation of people who need care in emergency were hospitalized and lived in nursing homes within 20 km radius from the NPS was completed after evacuation instruction without delay. 700 residents who were hospitalized between 20 km and 30 km from the NPS were transferred to 6 hospitals by March 21 after Fukushima Prefecture and other prefectures cooperated with the collaboratioon of relevant ministeries and agencies. 18 facilities with capacity of approximately 980 residents who lived in nursing homes between 20 km and 30 km from the NPS were transferred to appropriate facilities by March 22.

The “stay in-house” instruction to residents between 20 km and 30 km radius from Fukushima Dai-ichi NPS was lifted simultaneously with specifying Deliberate Evacuation Area and Emergency Evacuation-Prepared Area. (Refer to 4. for details of the establishment of Deliberate Evacuation Area and Emergency Evacuation-Prepared Area.)

7) Establishment of Restricted Area and temporary access to the area

a. Background of the temporary access

With the prolonged evacuation and “stay in-house,” some residents entered the evacuation area for such reason as bringing out daily commodities from home and other reason. Around

the end of March, the Local Headquarters and the Fukushima Prefectural Emergency Response Headquarters requested the relevant local governments to prohibit any access to the evacuation area within 20 km radius from Fukushima Dai-ichi NPS because of residents' safety risks. The Chief Cabinet Secretary also announced that off limits to evacuation area will be strictly enforced and a possibility of temporary access is under review in response to the requests by the residents from the Restricted Area.

b. Establishment of Restricted Area

Even though off-limits to the Restricted Area was communicated, considerable residents' safety risks were a matter of concern because the authority continuously recognized that some residents actually entered such area. On the other hand, as for making a shift from the evacuation area to legally enforceable Restricted Area, we had to carefully weigh the need of such change and the limited rights of the residents and to consider fully whether effectiveness of such enforcement can be assured. The Nuclear Emergency Response Headquarters coordinated with relevant local governments which were authorized to establish such Restricted Area.

On April 21, after the above preparations and based on opinions of the Nuclear Safety Commission, the Director-General of the Nuclear Emergency Response Headquarters issued an instruction to the heads of relevant local governments pursuant to the Act on Special Measures Concerning Nuclear Emergency Preparedness. This instruction was intended to establish the Restricted Area in the area originally specified as the evacuation area within 20 km radius from the NPS pursuant to the provisions of Disaster Countermeasure Basic Act replaced with the Act on Special Measures Concerning Nuclear Emergency Preparedness. In response to this instruction, the heads of relevant local governments established the Restricted Area on April 22. Establishment of the Restricted Area is intended to limit access to the area in order to prevent risks of residents and others entering the evacuation area, other than those engaged in emergency response measures (Emergency response to prevent expansion of the nuclear accidents) and the cases approved by the heads of local governments. After the establishment of Restricted Area, legal penalties are to be imposed on a person who enters the Restricted Area, and any access to such area is to be physically limited in principle.

c. Overview of temporary access

On April 21, the Nuclear Emergency Response Headquarters announced the basic viewpoints of temporary access concurrently with establishment of the Restricted Area. Temporary access is allowed within 20 km radius from Fukushima Dai-ichi NPS excluding 3 km radius from the NPS and high risk area. The residents are allowed to enter the area temporarily for a few hours and carry the minimum necessary goods out from there by ensuring safety. Also, corporate bodies, etc., whose inability to access the area is expected to cause serious loss of public interest shall be permitted by the heads of relevant local governments after consultations with the head of the Local Nuclear Emergency Response Headquarters. On April 23, the Director-General of the Headquarters announced the Permission Criteria for temporary access to Restricted Area (Eligibility, conditions and procedures, etc.). On May 9, NSC Japan provided technical advice on "Implementation of temporary access" upon request of the Nuclear Emergency Response Headquarters. The temporary access of residents was sequentially implemented pursuant to the permission criteria from May 10 onward, after coordination of relevant local governments, Fukushima prefecture and others. One of the 9 eligible local governments, Kawauchi Village, was allowed temporary access on May 10 and May 12. Later, temporary access was implemented for Katsurao Village on May 12, Tamura City on May 22, Minamisoma City on May 25 and 27, Tomioka Town on May 25, Futaba Town on May 26 and 27, and Namie Town on May 26 and 27.

(2) Efforts on nuclear emergency preparedness

1) Ensuring the safety and security of the residents and others

Based on the "Roadmap for Immediate Actions for the Assistance of Nuclear Sufferers" (May 17, refer to Appendix X-1), various actions are being taken under the lead of the Nuclear Sufferers Life Support Team to provide life support to nuclear sufferers. As a part of these actions, the following efforts are taken to ensure safety and security of residents and others concurrently with emergency measures.

・General information on nuclear emergency is provided at the press conferences and by press releases as well as on websites from the Nuclear Emergency Response Headquarters (NISA, Prime Minister's Office, etc.), the Local Headquarters, NSC Japan, and Tokyo Electric Power Co., Inc. (hereinafter referred to as TEPCO) accordingly.

・ Regarding health information related with radiation, MEXT has provided the Health

Counseling Hotline and the National Institute of Radiological Sciences (NIRS) has opened a health counseling contact to respond to the requests for consultation from the general public. Information on the safety of food and tap water is available on the website of Ministry of Health, Labor and Welfare (MHLW). In addition, in response to requests from the local governments, specialists, etc. from universities nationwide and the National Institute of Radiological Sciences have conducted explanatory meetings to residents regarding the health effect of radiation, etc.

・ As for the mental healthcare, MEXT opened the "portal site for mental care" on its website to provide information on contacts that provide counseling services for anxiety and distress of the residents of the disaster affected area as well as on children's mental care.

・ Also, MHLW opened a special page on its website to support the affected workers and their families as well as those who support them on its mental health portal called "Koroko-no-mimi (ear of the heart)." The website also posts, "How to protect your mental health" which gives some clues to protect mental health of the affected staying at shelters and other places. National Center of Neurology and Psychiatry (NCNP) also opened a webpage to provide information for healthcare professionals and those who support the affected.

・ Furthermore, "mental care teams" comprised of healthcare personnel etc. were dispatched to 3 prefectures affected by the disaster upon request of MHLW to work with health nurses to provide mental care to the affected as well as those who support them such as the employees of the local governments. (There are 24 persons in 6 teams in Fukushima Prefecture as of May 27)

・ The sufferers who evacuated from the evacuation area surrounding the NPS were not able to obtain sufficient information, which placed them in a situation where it was concerned that their anxiety over radiation-related issues which are difficult to understand, could be amplified. In order to ensure the delivery of readily understandable information to the sufferers, Local Headquarters published newsletter to post in shelters of the suffering areas (5 editions to date) and broadcasted radio programs featuring Q&A session at two local radio stations (AM and FM) everyday since April 11. These contents are posted on METI website to allow sufferers including those who evacuated out of Fukushima Prefecture to have access to them.

・ On May 7, upon request of Director-General of the Nuclear Emergency Response Headquarters, NSC Japan delivered its view in light of radiation protection and safety that it would have no objection against fishing by those engaging in fishery in the sea area beyond 30 km radius from Fukushima Dai-ichi NPS. In addition, NSC Japan advised Director-General of the Nuclear Emergency Response Headquarters to continue with monitoring, report to NSC Japan as appropriate and make efforts to mitigate radiation dose. On the same day, the Ministry of Agriculture, Forestry and Fisheries (MAFF) communicated this information to those related with fishery industry.

・ Fukushima Prefecture decided to conduct extensive medical checks to estimate radiation dose to date from the accident occurrence and survey the effect on health of 2 million citizens of the prefecture, which will start from some area in the prefecture in late June. On May 27, the first meeting of "Fukushima Prefecture Health Monitoring Survey Research Committee" was held. The details of the survey will be discussed in that committee.

2) Organization structure for the emergency response and other matters (Appendix V-2)

a. Overall governmental structure for the emergency response to the earthquake and the nuclear accident

・ As, in case of the East Japan Great Earthquake, a nuclear accident occurred after large-scale earthquake and tsunami, the Government of Japan established two central headquarters; Emergency Disaster Response Headquarters and Nuclear Emergency Response Headquarters, pursuant to the provisions of the Disaster Countermeasures Basic Act and the Act on Special Measures Concerning Nuclear Emergency Preparedness respectively. Local Headquarters (Government Local Liaison Disaster Response Office in Fukushima and Iwate Prefectures as well as Local Headquarters in Miyagi Prefecture, under the Disaster Countermeasures Basic Act) were established for each of those two Headquarters Life support teams were bolstered by establishing the teams as follows: the Headquarters for Special Measures to Assist the Lives of Disaster Victims as for Emergency Disaster Response Headquarters (currently renamed as the Team in charge of Assisting the Lives of Disaster Victims) and the Team in charge of Assisting the Lives of Victims around the Nuclear Power Station as for Nuclear Emergency Response Headquarters.

The two Headquarters are jointly operating to conduct some of the activities where possible, such as joint holding of Headquarters meetings and arrangement of procurement and

transportation of relief supplies for sufferers. The two Headquarters are also sharing information and making operational coordination, etc at meetings of Emergency Operations Team convened by Deputy Chief Cabinet Secretary for Crisis Management, with the participation of Director-General level and other officials from relevant ministries and agencies..

・ With regard to the identification of the actual status of emergency incidents at reactor facilities, emergency measures to be taken to control the incidents, and other matters, the Government and the nuclear operator established Integrated Headquarters for the Response to the Incident at the Fukushima Nuclear Power Stations (currently renamed as Government – TEPCO Integrated Response Office) (in operation from March 15 at Headquarters Office of TEPCO) for the purpose of working together, sharing information, making decisions and issuing instructions on necessary responses.

・ In the above stated organizational structure, the NSC, supported by members of the Emergency Technical Advisory Body and other experts and upon request by the Nuclear Emergency Response Headquarters and Local Headquarters, has provided technical advice for prevention of expansion of the accident pursuant to the provisions of the Act on Special Measures Concerning Nuclear Emergency Preparedness, reduction of public exposure and other matters. (Please refer to Appendices V-3 – V-5.) NSC's basic views on radiological protection are listed in Appendix V-6.

・ Two months after the occurrence of the Great East Japan Earthquake, the Government carried out reorganization to be based on three headquarters comprising headquarters for post-disaster reconstruction in addition to the above-mentioned two Headquarters with a view to clearly defining the role of each organization, renaming the organizations and for other purposes (from May 9) .

As an immediate response, based on the discussion made at the Headquarters for the Response to the Incident at the Fukushima Nuclear Power Stations (currently renamed as Government – TEPCO Integrated Response Office), the nuclear operator developed the "Roadmap towards Restoration from the Accident at Fukushima Daiichi Nuclear Power Station" (announced on April 17, revised on May 17. Please refer to Chapter X.) Also, based on the efforts made by the Team in charge of Assisting the Lives of Victims around the Nuclear Power Plant, the nuclear operator developed "Plan of Immediate Actions for the Assistance of Nuclear Sufferers" (May 17). The post-nuclear disaster responses are

currently implemented based thereon.

b. On-site organizational structure and other matters

・ The Local Headquarters was established pursuant to the Act on Special Measures Concerning Nuclear Emergency Preparedness at Off-site Center, but it was moved to Fukushima Prefectural Office (Please refer to the above (1)).

・ Meetings of the Joint Council for Nuclear Emergency Response have been held pursuant to the Act on Special Measures Concerning Nuclear Emergency Preparedness at the Local Headquarters, but the relevant municipalities, members of this Council, have not participated in it. This is because it was difficult to get all the relevant members together to hold a meeting of the Joint Council after the residents in the vicinity of the NPS had evacuated to other areas . As an alternative response, staffs of the Local Headquarters have visited relevant municipalities individually. As the municipalities under the regulation of food-related restriction expanded across the prefectural borders, Nuclear Emergency Response Headquarters in Tokyo, instead of Local Headquarters, has directly provided and exchanged information with them.

2. Implementation of environmental monitoring

(1) Environmental monitoring system

1) Environmental monitoring system

According to the Basic Disaster Prevention Plan, local governments are responsible for environmental monitoring after the occurrence of nuclear accidents and the subsequent establishment of the Nuclear Emergency Response Headquarters. The Ministry of Education, Culture, Sports, Science and Technology (MEXT), designated public institutions such as the National Institute of Radiological Sciences and Japan Atomic Energy Agency (JAEA), nuclear operators relating to the accidents and nuclear operators other than the afore-said are supposed to assist local governments in their environmental monitoring activities. In addition, nuclear operators are supposed to keep measuring radioactive dose, etc. on site boundaries and notify Local Nuclear Emergency Response Headquarters of information on the current condition and forecast of the discharge of radioactive materials, etc.

The accident at Fukushima Dai-ichi NPS occurred simultaneously with the natural disasters of the earthquake and tsunami. Consequently, 23 out of 24 monitoring posts in Fukushima prefecture became unusable and communication became very difficult. In addition, since Fukushima prefectural government and others including Ministry of Defense and Japan Coast Guard providing support in response to requests had to focus also on response to seismic disasters, on March 15 relevant staff was dispatched for that response from the Off-site Center which was the nuclear accident response center of Fukushima Prefecture. In this circumstance, MEXT assumed the responsiblity for environmental monitoring on and after March 16 as a result of the review of organizational roles within the Government.

NSC Japan provided technical advice on monitoring to MEXT on a sequential basis to improve the monitoring performed by MEXT, etc., while requesting MEXT to collect and measure dust in order to improve the accuracy of preliminary calculation by SPEEDI, the result of which was reflected in that calculation. In addition, the NSC evaluated monitoring results by MEXT, etc. and released the results on the web page and explained to media from March 25.

2) Operator's monitoring system

The NPS radiation control division of TEPCO, during its normal operation, monitors radioactive dose rate, radioactive material concentration and weather condition at the monitoring posts installed in surrounding monitoring areas, discharge monitoring facilities for air/liquid radioactive waste, and weather observation facilities. Furthermore, TEPCO, periodically on and off the site, collects samples from the ground and the sea, and monitors radioactive material concentration in the surrounding environment (Attachment V-7 Normal monitoring system)

In case of emergency, TEPCO is supposed to have its on-site organization for nuclear emergency preparedness and response under the Nuclear Operator Emergency Action Plan undertake activities including prediction of radiation-affected areas by measuring radioactive dose rate in and outside the NPS and concentration of radioactive materials . (Attachment V-8 Emergency monitoring system)

(2) Monitoring condition after the accidents

1) Monitoring condition in the NPS site

a. Air dose measurement

After the earthquake, measured values of GM measuring tubes were higher than usual in reactor facilities, while values measured at monitoring posts installed in the surrounding monitoring areas of Fukushima Dai-ichi NPS showed no anomaly. (Attachment V-9 Measured results of monitoring posts)

After the loss of external power supply on March 11, TEPCO became unable to measure at monitoring posts and started using a monitoring car for environmental radiation monitoring on that day. External power supply was restored on March 25 and TEPCO became able to measure at monitoring posts again. It has been continuing with measurement by installing three temporary monitoring posts on the site since March 23.

While monitoring data is usually released automatically on the operator's web page in real time, only limited contents compiled to the extent possible through manual work were initially released because measuring at monitoring posts became impossible after the accident. The monitoring car used for radiation measurement this time can obtain data every 2 minutes. However, the said operator continued to use only the values measured every 10 minutes as before in releasing monitoring data. The operator later checked the data and released all the measured values together on May 28.

b. Discharge monitoring

Immediately after the Tohoku District - Off the Pacific Ocean Earthquake, no abnormal values were measured by the air stack monitor of each unit in Fukushima Dai-ichi NPS. (Attachment V-10：Measured results of monitor)

However, after the loss of external power supply on March 11, the operation of air-conditioning and ventilation facilities and sampling facilities suspended and therefore discharge monitoring became not possible. Althoughmeasured results of the air stack monitoring in some units were recorded until March 12, it is presumed that those results were caused by an increase in the level of radioactivity outside measuring facilities, given the suspension of the operation of the sampling facilities.

c. Weather observation

Direction and speed of wind and atmospheric stability, etc. are monitored by common observation facilities in Fukushima Dai-ichi NPS. However, measurement in these facilities became impossible due to the loss of external power supply on March 11. TEPCO therefore started using a monitoring car for weather observation on March 11. TEPCO is still using it because it cannot perform inspection and calibration although power supply for the said facilities was restored on April 9.

d. Radioactivity analysis on soil

In terms of radioactivity analysis on soil of the site of Fukushima Dai-ichi NPS, soil samples were taken on March 21 and 22 at five points on the site and plutonium analysis was performed. Possible release of plutonium It is presumable that, in light of the radioactive ratio of the detected plutonium isotopes, the plutonium may have been released due to the accident of this time, not due to the past atmospheric nuclear testing. Regarding detected concentration, Pu-239 and Pu-240 were within the range of the observed values, while Pu-238 was slightly above those values when compared against the fallout observed at the past atmospheric nuclear testing performed in Japan (1978-2008). Later, samples were taken on a regular basis and analyses on plutonium, gamma nuclide and strontium were performed. (Attachment V-11: Nuclide analysis results of radioactive materials in the soil)

e. Radioactivity analysis on seawater and ocean soil

Regarding radioactivity analysis on seawater near the Water Discharge Canal of Fukushima Dai-ichi NPS, TEPCO started taking seawater samples at the Southern Water Discharge Canal and performed radioactivity analysis from March 21, as peripheral environmental monitoring. Because radioactive materials were detected as a result of the analysis, TEPCO has continued with radioactivity analysis by increasing sampling locations and frequency since March 22. As stated below, after observing the water outflow from a pit to the sea on April 2, TEPCO took samples from seawater in the pit and in front of bar screen near the pit to perform radioactivity analysis.

As of May 8, TEPCO added sampling locations such as North Water Discharge Canal,

shallow draft quay, the Intake Channels (north and south), Unit 2 screen (inside and outside of silt screen) one after another and took seawater samples to perform radioactivity analysis. (Attachment V-12: Seawater analysis results)

In terms of radioactivity analysis on ocean soil offshore of Fukushima Dai-ichi NPS, TEPCO took samples from ocean soil at two locations (3km offshore of Kodaka ward and Iwasawa coast) on April 29 and performed radioactivity analysis and detected higher iodine and cesium than usual.

2) Situation of monitoring outside the NPS site

a. Onshore area monitoring around Fukushima Dai-ichi NPS

(a) Air dose rate beyond 20km from Fukushima Dai-ichi NPS

MEXT, with the cooperation of JAEA, has been measuring air dose rate since March 15, using up to 15 monitoring cars in liaise with Fukushima Prefecture, the National Police Agency, the Ministry of Defense and electric power companies, in order to figuring out the condition of dispersal and diffusion of radioactive materials in the onshore area beyond 20km from Fukushima Dai-ichi NPS (12 points such as Kawauchi Village, Futaba Country, etc. in liaise with the National Police Agency, and four points such as garrison in Fukushima Prefecture, etc. in liaise with the Ministry of Defense). The measurement results are released by MEXT every day. In addition, MEXT, the Nuclear Safety Commission and the Nuclear and Industrial Safety Agency jointly estimated the cumulative dosage for one year after the occurrence of the accident based on the observed values of air dose rate, etc., and reported the contour line map to the Nuclear Safety Commission on April 10, which was released by the Nuclear Emergency Response Headquarters on April 11 and used as discussion data contributing to establishment of the planned evacuation zone (Attachment V-13-1).

(Measurement details)

・MEXT has been measuring the air dose rate beyond 20km from Fukushima Dai-ichi NPS on and after March 15. The Ministry of Defense has been measuring the air dose rate at four points such as garrison in the Prefecture including garrison twice a day on and after March 27, and MEXT has been releasing the results.

・ At first, the Ministry of Education, Culture, Sports, Science and Technology measured at various points extensively and cyclopaedically in order to obtain an indication of the condition of dispersal and diffusion of radioactive materials. Based on the results and in consideration of wind direction and topographical features, the Ministry selected main points in each direction and measures at the same points periodically from then.

・ At first, MEXT measured at various points extensively and cyclopaedically in order to obtain an indication of the condition of dispersal and diffusion of radioactive materials. Based on the results and in consideration of wind direction and topographical features, the Ministry selected main points in each direction and has been measuring at the same points periodically since then.

・ The Ministry of Education, Culture, Sports, Science and Technology started to release sequentially the results of the air cumulative dosage measurement in Fukushima Prefecture measured by the Prefecture on April 12.

・ MEXT released the results of the mesh investigation conducted by Fukushima Prefecture from April 12 to 16.

・ With regard to the monitoring conducted by MEXT, JAEA and Fukushima Prefecture, the Ministry released the monitoring results of Minamisoma City, Iitate Village, Namie Town, Katsurao Village, Tamura City, Kawauchi Village, Hirono Town and Iwaki City on April 13. In addition, the Ministry released the traveling monitoring results of Kawamata Town on April 18.

・ Following the Environmental Monitoring Enhancement Plan established by the Government Nuclear Emergency Response Headquarters on April 22, MEXT created the “dosage measurement map”with cooperation of JAEA to figure out the current distribution condition of radioactive materials and also the “cumulative dosage estimation map” to estimate the amount of the cumulative dosage for a year and released on April 26. After that the Ministry announced the policy to release the “dosage measurement map” and the “cumulative dosage estimation map” to be reflected the latest data approximately twice a month, and made the second release including the data within 20km on May 16 (Attachment V-13-2).

(Measurement method)

・ The air dose rate measurement by monitoring car has been conducted by more than one monitoring car from morning till evening every day since March 15. The GM (Gerger-Muller) counter, ionization chamber and NaI scintillation detector are used as detector.

(Measurement results)

・ Among the points (【31】,【32】,【33】,【81】and【83】) periodically measured, relatively high values (highest value: 170μSv/h at【32】on March 17) are detected at five points located 30 km northwest from the NPS so far.

・ Moreover, the highest value 330μSv/h was observed at the point located approximately 20 km northwest from Fukushima Dai-ichi NPS from 20:40 to 20:50 on March 15.

・ As to the cumulative dosage, relatively high values (35,720μSv at【32】(cumulative value from 12:14 on March 23 to 10:24 on May 30) and (20,230μSv at【33】(cumulative value from 12:32 on March 23 to 10:08 on May 30)) were detected in the northwest direction.

(b) Air dose rate, soil radioactivity concentration, etc. within 20km from Fukushima Dai-ichi NPS

As information for discussing how to meet the requests for temporary-home-visit from residents evacuated from the evacuation zone (warning zone from April 22), MEXT measured the air dose rate and soil radioactivity concentration within 20km from Fukushima Dai-ichi NPS in cooperation with electric power companies from March 30 to April 19. In addition, the measurement has been continued in consideration of utilizing to grasp the whole picture of accident condition and lift the zones, etc. since May 6. The analysis of soil radioactivity concentration is conducted by JAEA, TEPCO and the Japan Chemical Analysis Center (hereinafter referred to as “JCAC”) (Attachment V-13-3).

(Measurement details)

・ The air dose rate was measured on March 30 to April 2, and April 18 and 19, and MEXT released the results on April 21. The measurement results of radioactive materials in air and soil radioactivity concentration conducted on April 2 and 18 were released by the Ministry on April 25. After that, the Ministry releases the results sequentially on and after May 12.

(Measurement method)

・ The air dose rate is measured using more than one monitoring car. The GM (Geiger-Muller) counter, ionization chamber and NaI scintillation detector are used as detector. The soil radioactivity concentration is measured using germanium semiconductor detector for 1,000 or 3,600 seconds per sample (which varies by sample).

(Measurement results)

・ As to the air dose rate within 20km from Fukushima Dai-ichi NPA, relatively high dose rate (highest value: 124μSv/h at【44】on April 2) was detected in the northwest direction.

(c) Monitoring of the dusts in the atmosphere, environmental samples, and soils

(Measurement started from samples taken from March 18)

MEXT has started measurement of radioactivity concentration in the dusts within the atmosphere, environmental samples (weeds, water in ponds), and soils taken since March 18 in order to use them to figure out distribution and accumulation status of radionuclides in the area 20km or more apart from Fukushima Dai-ichi NPS and for the settlement of deliberate evacuation area. Analysis was made by JAEA, Nippon Chemical Analysis center and Fukushima Prefecture (Appendix V-13-4).

(Details of measurement)

・ Radioactive materials (Bq/㎥) in the atmosphere as well as concentration of radioactive materials (Bq/kg) in soils and weeds 20km or more away from Fukushima Dai-ichi NPS were measured.

(Measurement method)

・Dusts in the atmosphere and environmental samples are measured with the use of Germanium semiconductor detector for 1000sec. or 3600sec. per sample (which varies by sample).

(Results of measurement)

・ High level concentration of radioactive materials were detected in the soils and weeds taken in Iidate village (40km northern west from said NPS) on March 20. (soil :Iodine 131; 1.17MBq/kg Cesium 137 ; 0.163MBq/kg. weeds: Iodine 131; 2.54MBq/kg Cesium 137; 2.65MBq/kg)

・ On April 1 MEXT announced analysis results of Pu and U in the soil samples at three

points 20km or more away from Fukushima Dai-ichi NPS. According to the results, Pu was not detected and U was detected at the rate equivalent to the rate in the natural world. On April 26 MEXT also announced analysis results of Pu in the soil samples at four points. Those results show that it seems that scattering of Pu was not caused by the accidents this time. (Appendix V-14).

・ On April 12 and May 31, MEXT furher announced the analysis results of radio strontium in the land soils and plants. (Appendix V-14).

(d) Offshore area monitoring (Measurement starts from samples taken on March 23)

MEXT started measurement of concentration of radioactive materials in dusts within the atmosphere above the sea, seawater, and soils at the sea bottom, and air dose rate above the sea in the sea area off the coast of Fukushima Prefecture and Ibaraki Prefecture, etc. in concert with Fisheries Agency, Japan Coast Guard, Independent Cooperation Japan Agency for Marine-Earth Science and Technology (hereinafter referred to as JAMSTEC), JAEA, and TEPCO from March 23 in order to use them to figure out contaminated degree in the sea area and evaluate the establishment of a warning zone, etc.. (Appendix-V-5)

(Details of measurement)

・ In order to measure radioactivity concentration in the seawater of the sea area and dusts above the sea, seawater (from March 28 adding the sampling of water in lower layer to the sampling of surface water) and dusts in the sea area off the coast of Fukushima Prefecture and Ibaraki Prefecture have been collected with the use of research vessel of JAMSTEC and analyzed in JAEA. MEXT made an announcement on May 3 in terms of radioactivity concentration in the soil at the sea bottom collected on April 29, and is making further announcements after that.

・ Responding the discharge of stagnant water etc. with low-level radioactive materials as measures in emergency conducted by TEPCO on April 4, MEXT announced to enhance the sea area monitoring on April 5.

・Responding to the “Plan to enhance environmental monitoring” developed by Government Nuclear Emergency Response Headquarters on April 22, MEXT made an announcement about enhancement of sea area monitoring on April 25. Furthermore, considering that scattering of radioactive materials in sea area is predicted and also wide

ranging sea area monitoring needs to be implemented, MEXT announced on May 6 that it would widen the area for sea area monitoring with cooperation from concerned ministries and agencies.

・ Fisheries Agencies drew up “Basic Policy for Inspections on Radioactive Materials in Fishery Products” and notified relevant prefectures etc. of it on May 2.

・ MEXT made public on and after April 29 the results analyzed by TEPCO in respect of the seawater samples collected by “Meiyou”, a survey vessel of Japan Coast Guard, in the coast of Ibaraki Prefecture.

(Measurement method)

・ In terms of seawater, 0.5 litter of water has been taken once per four days at 16 points (12 points till April 21) from surface layer (nearly 1 to 2m below surface), middle layer (between surface and sea bottom) and lower layer (approximately 10m above sea bottom) with the use of CTD water sampler from March 28 to May 7. (sampling from middle layer and from lower layer started from April 25 and from March 28, respectively)

・ From March 23 to 27, the water samples were taken every two days from surface layer at eight points, and analyzed.

・ Dusts above the sea and seawater are measured in JAEA with Germanium semiconductor detector.

(Results of measurement)

・ Measurement results are shown in the Appendix 16.

・ Incidentally, the sea diffusion simulation is on-going based on the results of sea area monitoring. (Refer to Chapter II (3)).

(e) Aircraft monitoring (starting with sampling on March 25)

In order to contribute to figuring out the status of the accumulation of radioactive materials on the ground surface, and evaluating the establishment of the planned evacuation zone, etc., the MEXT, in cooperation with the Ministry of Defense, TEPCO, and the U.S. Department of Energy (hereinafter referred to as “U.S. DOE”), etc. measured

radioactive materials accumulated on the ground extensively and promptly.

(Details measured)

・ From March 25, in order to find the situation of radioactive materials in the atmosphere from the Fukushima Dai-ichi NPS, MEXT, with assistance from the Japan Aerospace Exploration Agency, independent administrative institution (hereinafter referred to as "JAXA") and civil small aircrafts, used the aircrafts with radiation measuring instruments on board to conduct monitoring in the air above the site.

・ Along with the above, from March 24, in order to three-dimensionally find the diffusion situation of the radioactive materials in the atmosphere from the Fukushima Dai-ichi NPS, including vertical altitude, on the request of MEXT, the Ministry of Defense conducted measurement, by altitude, of nuclides and radioactive concentration of radioactive materials contained in dust in the air over Japan by aircrafts with dust measuring instruments on board.

・ Later, since the abovementioned two airborne monitorings found that air dose rates and radioactive concentrations in the air were not high, the measurement was suspended. Meanwhile, from April 6, in order to recognize extensive impact of radioactive materials, and to evaluate radiation dose and the accumulation of radioactive materials in the evacuation areas, etc. in the future, MEXT and U.S. DOE worked together to conduct airborne monitoring, finding air dose rates on the level of 1m high above the ground and the accumulation situation of radioactive materials on the ground surface within 80km radius from the Fukushima Dai-ichi NPS.

・ From May 18, MEXT conducted the 2nd airborne monitoring within 80 to 100km radius from the Fukushima Dai-ichi NPS. Currently, the results of measurements are being analyzed. Also, from May 31, MEXT has been conducting the 3rd airborne monitoring within 80km radius from the Fukushima Dai-ichi NPS, with assistance from the Ministry of Defense. MEXT is working together with U.S. DOE and to analyze the monitoring data.

(Measuring method used)

・ Air dose rates in the air were measured beyond 30km from the Fukushima Dai-ichi NPS, using a JAXA's small aircraft on Mon/Wed/Fri from March 25 to April 4 and a TEPCO helicopter on Tue/Thur/Sat from March 31 to April 21, respectively on an every other day basis, with radiation measuring instruments of the Nuclear Safety Technology Center on board.

・ From March 24 to April 1, an aircraft of the Ministry of Defense with dust samplers on board conducted measurement of radioactive concentration in dust in the air at 5,000 feet high above from Ibaraki Prefecture to Niigata Prefecture, and off the coast of Fukushima.

・ From April 6 to 29, MEXT and U.S. DOE, working on the air zone allocated for each, measured air dose rates on the level of 1m high from the ground surface, using NaI scintillator radiation detectors on aircraft and helicopter, flying over 150m to 300m high within 80km radius from the Fukushima Dai-ichi NPS. Along with that, using NaI gamma-ray spectrometers on the same aircraft, energy of spectra specific to each nuclide was analyzed, and based on the analysis results of nuclides of gamma-ray observed on the ground with energy analysis equipment (in-situ analyzer), the accumulation of radioactive cesium on the ground surface was found. These results were released on May 6.

(Measurement results)

・ The two airborne monitorings by MEXT as mentioned above in which JAXA , TEPCO and the Ministry of Defense worked together, found that air dose rates and radioactive concentrations in the air were not high, resulting in these measurements being suspended.

・ Meanwhile, on May 6, based on a joint airborne monitoring with the U.S. DOE, MEXT created a map showing air dose rates on the level of 1m high above the ground surface and the accumulation of the radioactive materials on the ground surface, in order to complement monitoring on the ground (Attachment V-17).

b. Survey on environmental radioactivity conducted nationwide

(a) Survey on environmental radioactivity level by Prefecture

In order to see the picture of the environmental radioactivity level nationwide, the monitoring posts established in each prefecture have been measuring the air dose rate since March 12.

(Details measured)

・ Air dose rate in Prefectures (Fukushima Prefecture measures and make the readings open to the public by its own; Miyagi Prefecture was not able to measure due to damage caused by the disaster, but started from March 28 using additional equipment).

・ With assistance from universities, etc., simple cumulative dosemeters are installed, measuring cumulative radiation dose for 24 hours from 14:00 on a daily basis (On April 12, 28 measuring points were added, helped by universities, etc. in Western Japan, amounting to 54 points in total).

(Measuring method used)

・ Air dose rates in each prefecture are continuously measured, using NaI scintillation detectors, with data measured every hour, and released the readings twice a day.

・ For measurement with assistance from universities, etc., cumulative dosemeters are installed to measure cumulative dose rates of 24 hours, and the readings are released once a day.

(Measurement results)

・ Air dose rates in each prefecture are available on the MEXT website, with the readings and the graphic representations.

(b) Fallout at the fixed time

In order to figure out the level of environmental radioactivity across the country, radioactive concentrations in dust in the air in each prefecture are measured, starting with the sampling on March 18.

(Details measured)

・ Radioactive concentrations (MBq/k ㎡) of fallouts from the air in each prefecture (except Miyagi Prefecture, where it is unable to measure due to the damage caused by disaster) are measured (for 24 hours).

・ In Fukushima Prefecture, where measurements of radioactive nuclides contained in drinking water and suspended dust in the air, etc. are the first priority, fallouts were not measured due to unavailability of equipment for analysis, but the prefectrural government started to analyze them with sampling on March 27 and 28 (for 24 hours).

(Measurement method)

・ Analysis is made on fallout for the period of 24 hours by germanium semiconductor

detector (it takes approximately six hours), and the results are released to the public once a day.

(Measurement results)

・ The overall trend is that high radioactivity was detected in Tohoku and Kanto districts during the period from March 20 to 24, but it drastically decreased later. In addition, as mentioned above, note that measurement of fallout could not be conducted in Fukushima Prefecture (Fukushima City), which was directly affected by the disaster, and had prioritized the analysis on radioactive nuclide contained in drinking water, atmospheric air borne dust, etc. soon after occurrence of the disaster.

・ In the samples in Ibaraki Prefecture (Hitachinaka City) on March 20 and 21, Iodine-131 of 93 G Bq/k㎡ and Cesium-137 of 13 GBq/k㎡ were detected.

・ In the samples in Fukushima Prefecture (Fukushima City), Iodine-131 of 23GBq/k㎡ and Cesium-137 of 790MBq/k㎡ were detected. (The readings drastically decreased later.)

(c) Drinking water (tap water)

With an aim to figure out the nation-wide radioactivity concentration level, the radioactivity concentration contained in tap water in each prefecture is measured for samples on and after March 17.

(Measurement details)

・ The radioactivity concentration (Bq/kg) contained in tap water in each prefecture is measured. (However, Fukushima Prefecture measures and make the readings open to the public by its own; and Miyagi Prefecture was not able to measure due to damage caused by the disaster.)

(Measurement method)

・ Analysis is made on two liters of tap water by germanium semiconductor detector (it takes approximately six hours), and the results are released to the public once a day.

(Measurement results)

・ The readings are as per Attachment V-18.

・Although Iodine-131 and Cesium-137 were detected in all prefectures in Tohoku and Kanto districts (except for Aomori), Niigata Prefecture and Yamanashi Prefecture, all values were below the index for restriction on intake of food and drink (Iodine-131: 300 Bq/kg and Cesium-137: 200Bq/kg).

3. Measures for agricultural products and drinking water, etc.

(1) Measures for agricultural products, etc.

Regarding food products including agricultural ones, because of the radioactivity detected from surrounding environments of Fukushima Dai-ichi NPS after the NPS accidents, the Ministry of Health, Labor and Welfare (MHLW) notified to each prefecture on March 17, based on technical advice from NSC Japan, that “Guideline values for food and drink intake restrictions” provided by NSC Japan should be provisional regulation values for radioactive materials contained in food products and that any food product that contains radioactive materials exceeding these values should not be consumed pursuant to Item 2, Article 6 of the Food Sanitation Law.

MHLW later has collected and made publice the information on inspection findings obtained from local governments. In addition, in terms of items exceeding the provisional regulation values, if their production is thought to have covered wide areas, the Prime Minister, the Director-General of the Nuclear Emergency Response Headquarters, issued instructions from March 21 to relevant governors of prefectures about distribution restrictions on the said items, based on advice from the NSC Japan, under the provisions of Paragraph 3, Article 20 of Act on Special Measures Concerning Nuclear Emergency Preparedness. (Attachment V-19: Instructions on food products pursuant to the Act on Special Measures Concerning Nuclear Emergency Preparedness {List of instructions on distribution and intake restrictions})

In addition, the Ministry of Agriculture, Forestry and Fisheries (MAFF) notified related parties of how to dispose of vegetables and raw milk (including distribution-restricted vegetables, etc.), from which radioactive materials were detected, based on technical advice from Emergency Technical Advisory Body of the NSC on March 25, April 26, and May 6.

After setting provisional regulation values under the Food Sanitation Law, the Nuclear Emergency Response Headquarters reviewed an inspection plan and how to set and lift these

restrictions to determine the necessity of food distribution restrictions, etc. based on accumulated inspection findings. Specifically, based on technical advice from the NSC, the Headquarters decided the following and announced it on April 4: 1) the borders of distribution-restricted areas should be basically the same as those of prefectures, while the areas can be divided if prefectural and/or municipal governments can keep management on these areas; and 2) weekly inspections should be conducted in the distribution-restricted areas (these inspections should be conducted basically in multiple cities, towns and villages) and the restrictions can be lifted if inspection findings continue to be below provisional regulation values three consecutive times. Subsequently, after April 8, distribution restrictions on items and areas that have met the standards have been lifted.

In addition, regarding radioactive iodine in fishery products on which the NSC has decided no guideline values, no provisional regulation values were set either, immediately after the accident. However, based on case reports on a considerable amount of radioactive iodine detected from fishery products, MHLW decided to use the same provisional regulation values for radioactive iodine in vegetables as for fishery products as well, referring to technical advice from the NSC Japan, and notified of the decision each prefecture, etc.

In terms of rice, before the arrival of period for planting, the Nuclear Emergency Response Headquarters announced its thoughts on rice planting based on technical advice from the NSC on April 8. Based on the Headquarter's thoughts, the Prime Minister, the Director-General of the Nuclear Emergency Response Headquarters, issued instructions on April 22 about rice planting restrictions to relevant prefectural governors, under the provisions of Paragraph 3, Article 20 of the Act on Special Measures Concerning Nuclear Emergency Preparedness.

(2) Measures for drinking water

In terms of drinking water, MHLW issued a notice to the waterworks office of the each prefectural government and waterworks operators of each prefecture, etc. on March 19 and 21 that drinking tap water that contains radioactive materials exceeding the guideline values etc. set by the NSC should be avoided, and MHLW has publicized the measurement readings by related local governments, etc. MHLW requested water operators, etc. to implement intake restrictions and notify the relevant residents of the restrictions if the radioactive materials that is contained in the tap water has exceeded the guideline values, etc.

MHLW takes more general safety measures, for example, by developing the "Future monitoring policy on radioactive materials in tap water" in which MHLW requests local governments to carry out the inspection of tap water mainly in Fukushima Prefecture and its neighboring ten prefectures more than once per week, while daily inspection should be conducted if the readings exceed the guideline values, etc. or they are likely to exceed them, because MHLW thinks it desirable to inspect radioactive materials in the tap water on a frequent basis to confirm the safety of tap water.

As stated above, MHLW promptly makes public the results of the inspection of radioactive materials in food products, including agricultural ones, and tap water, properly sets and announces regulation values and issues relevant instructions on distribution and intake restrictions.

4. Measures for additional protected areas

(1) Background of setting Deliberate Evacuation Areas and Emergency Evacuation Preparation Areas

1) Environmental monitoring and its evaluation

After the accident occurred, the Ministry of Education, Culture, Sports, Science and Technology (MEXT) continues conducting environmental monitoring around Fukushima Dai-ichi and Dai-ni NPSs and the NSC continuously evaluates monitoring results. It was thought that the integrated dose in the areas where the air radiation dose rate of over 100μSv/h was measured may reach the guideline values for in-house evacuation (10 to 50 mSv) based on "Disaster prevention measures for nuclear facilities, etc. (developed by the NSC in June, 1980)" (hereinafter referred to as "Disaster prevention guide"), however, it was found that only a limited area was in such a state. Based on this fact, the NSC requested the Nuclear and Industrial Safety Agency (NISA) on March 18 to check the existence of houses, etc. and MEXT to install integrating dosimeters and observe the readings carefully (Note 1). Based on the readings of the dose rate etc., the NSC expressed its view on March 25 that the situation was not such that change of in-house evacuation areas is not necessary at present while giving technical advice to the Nuclear Emergency Response Headquarters to request residents to voluntarily evacuate from areas where relatively high dose was expected. However, in the "Evaluation on environmental monitoring findings" on March 26, the NSC announced its views and requests it made after March 18 and it also announced that weight

coefficient 0.6 of the value multiplied by reduction coefficient 0.4 (Note 2) was used for calculating the accumulated dose in 16 hours of in-house evacuation. From March 25 to April 4, the NSC maintained its view that the situation was not such that change of in-house evacuation areas is not necessary, but after April 5 it changed its view that it was now organizing necessary technical data for future measures, considering the readings of dose rate, etc.

(Note 1) http://www.nsc.go.jp/ad/pdf/20110318_1.pdf
http://www.nsc.go.jp/nsc_mnt/110325.pdf

(Note 2) reduction coefficient 0.4 of wooden houses in the Table 2 of Appendix 8 to "Disaster prevention measures for nuclear facilities, etc."

2) NSC Japan's views

On April 7, the Chief Cabinet Secretary announced that the Government was reviewing the handling of areas where accumulated dose was on an increase and expressed its opinion that it would seek technical advice from the NSC while referring to opinions of IAEA and ICRP.

Outside the evacuation area in 20km radius of Fukushima Dai-ichi NPS, there were places with a possible increase in accumulated air dose. In this situation, the Director-General of the Nuclear Emergency Response Headquarters sought opinions of the NSC on the following matters: In the situation that there were places with a possible increase in accumulated air dose outside 20km radius of Fukushima Dai-ichi NPS, the matters were the existence of areas that required the implementation of emergency response measures, as well as matters that should be notified to residents within the areas. In addition, amid unsettled condition of the NPS accident, the other matters were how to decide the areas that required the implementation of emergency response measures within in-house evacuation areas in the 20-30km radius from the NSC, as well as matters that should be notified to residents within the areas. Regarding the abovementiond matters, the NSC acknowledged as follows: On March 15, the Fukushima Dai-ichi NPS had events such as a possible damage to the pressure suppression chamber of Unit 2 in the Fukushima Dai-ichi NPS, and the release of a considerable amount of radioactivity was probable. When the radioactive cloud released that time arrived in the northwest direction, rainfall occurred. This caused a considerable amount of radioactive materials to deposit on the land surface of the areas, which was considered to be the primary cause of continued, relatively high air dose rate in the said areas. On the other

hand, guideline values for protective measures under the NSC's disaster prevention guide were set in a possible short-period case of about one week or so. From the perspective of keeping the exposure level low as long as reasonably achievable, the NSC made a judgment that 20mSv/yr, which was the lowest of the reference 20-100mSv (acute or annual) range for protecting the public in the emergency exposure condition at the accident specified by ICRP's advise given in 2007, should be the proper standard for protection measures. The NSC proposed that an area with the possibility of accumulated dose reaching 20mSv within one year after the accidents was regarded as "Deliberate Evacuation Area." In addition, among "In-house Evacuation Area" as of April 10, areas other than those falling under the "Deliberate Evacuation Area" were proposed as "Emergency Evacuation Preparation Area" because in these areas there may be necessity of an urgent response due to unsettled condition of the NPS accident. Furthermore, the NSC also proposed that a review on setting of the "Deliberate Evacuation Preparation Area" and "Emergency Evacuation Preparation Area" was necessary at the point when radioactive materials discharged from the NPS became judged as manageable. For these proposals, standard values (20 to 100 mSv/yr) of radiation protection in the emergency exposure condition of ICRP and IAEA were considered.

Attachment V-20 summarizes the concept and basis for dose standards of radiation protection. On April 10, the NSC received the reports on "Estimating Accumulated Dose in Surrounding Areas Outside 20km Radius of Fukushima Dai-ichi NPS" and "Accumulated External Exposure Dose (SPEEDI trial calculation values from March 12 to April 5)." These data were used when deliberate evacuation areas were actually designated.

3) Basic concept of Deliberate Evacuation Areas and Emergency Evaluation Preparation Areas

The Chief Cabinet Secretary announced the basic concept for establishing the Deliberate Evacuation Area and the Emergency Evacuation Preparation Area on April 11. According to the basic concept, areas where accumulated dose was likely to reach 20mSv within a year after the accidents were designated as "Deliberate Evacuation Areas" while those other than the Deliberate Evacuation Preparation Areas in the In-house Evacuation Zone were designated as "Emergency Evacuation Preparation Areas" because emergency responses were likely to be required due to unsettled aftermath of the accident at the NPS. The Deliberate Evacuation Preparation Areas are Katsurao Village, Namie Town, Iitate Village, part of Kawamata Village and part of Minamisoma City except for Evacuation Areas. The Emergency Evacuation Preparation Areas are Hirono Town, Naraha Town, Kawauchi Village, part of Tamura City and part of Minamisoma City except for Evacuation Areas.

Establishment of the Deliberate Evacuation Areas and Emergency Evacuation Preparation Areas will be reviewed when discharge of radioactive materials from Fukushima Dai-ichi NPS has become considered as manageable.

(2) Background to establishment of deliberate evacuation area and emergency evaluation area

The Director-General of the Nuclear Emergency Response Headquarters issued the instructions on April 22 according to the abovementioned basic concept under the Act on Special Measures Concerning Nuclear Emergency Preparedness. According to the instructions, residents etc. in the Deliberate Evacuation Areas were basically required to stay away from these areas within about a month after the instructions were issued. Residents etc. in the Emergency Evacuation Preparation Areas were required to keep prepared for moving out of the areas or in-house evacuation. In addition, voluntary evacuation continues to be required for residents of the areas.

The instruction to stay in-house issued to residents within 20km-30km radius of Fukushima Dai-ichi NPS was cancelled when Deliberate Evacuation Areas and Emergency Evacuation Preparation Areas were established.

In establishing these areas, the Government discussed with relevant local governments regarding concrete areas by explaining such plan to relevant cities, towns, and villages that can become included in either of these areas.

Before establishing these areas, the government discussed with relevant local governments regarding concrete areas by explaining such plan to relevant cities, towns, and villages that can become included in either of these areas.

5. Assessment of nuclear emergency response

Regarding response to the NPS accidents, as a result rapid progression was not be able to be prevented and the release of radioactive materials to outside, which is essentially impermissible, affected extensively in the long term. To the extent of knowledge obtained at this point, we will sort out the recognitions of current situation mainly from technical standpoint.

(1) General items

As an emergency response after occurrence of disaster, basic procedures were implemented such as declaration of the Nuclear Emergency, establishment of the Nuclear Emergency Response Headquarters, etc., direction of evacuation, etc. pursuant to the provisions of the Act on Special Measures Concerning Nuclear Emergency Preparedness.

As to protective activities for residents, etc., in an environment that plant information available are limited due to influence of earthquake and tsunami, under the severe circumstances that release of radioactive materials, explosion of the reactor buildings, etc. occurred in succession within a few days, the responses including establishment of evacuation area, etc. were carried out.

Moreover, at the same time, the efforts on ensuing confidence and safety of residents are being promoted such as environment monitoring, ingestion limit of food or beverage, health consultation, mental healthcare, etc.

On the other hand, in the recent responses, call up personnel to establish the initial system was small due to influence of earthquake disaster, the Off-site Center (OFC) was forced to be moved, emergency response measures implementation area was expanded to the area exceeding 10-kilometer radius from the NPS, and evacuation of residents, etc. is prolonged, and as a result, it needed to amend, strengthen, etc. the existing framework. Moreover, it is considered that the advance preparation was not adequate for a series of responses from establishment of initial responses to measures for restoration.

As background against it, because we have not experienced the disasters subject to the Act on Special Measures Concerning Nuclear Emergency Preparedness since the Act on Special Measures Concerning Nuclear Emergency Preparedness was established in the wake of the JCO criticality accident, it is thought that the effectiveness of the emergency preparedness has not been fully verified as bringing occurrence of severe accident into reality in some aspects.

In addition, in the past operation of the nuclear emergency response drill, etc., it is thought in some aspects that the failure of safety function was assumed be restored relatively early on the basis of severe accident. That is to day, details and system of emergency response have been developed and managed in some aspects on the presumption that if the nuclear disaster has occurred by any cause, the situation is saved relatively in a short time by taking emergency measures by TEPCO using the existing facilities, etc. and providing technical instruction and advice and coordinating by the Nuclear and Industrial Safety Agency in the local range with a

central focus on the said facilities.

Moreover, concrete assumption has not been made about the situation that the nuclear disaster occurs combined with earthquake, tsunami, etc.

On the basis of the disaster, it is required to restore, etc. the functions of damaged the Off-site Center (OFC) and to improve the management of the emergency measures immediately in cooperation among related ministries and agencies, related local governments, TEPCO, etc. as well.

It is also required to conduct a review of system, structure, etc. thoroughly and improve them continuously as well in order to secure the rapid and adequate emergency response and take smooth measures focusing on continued backward response against any situation starting with the situation which disaster occurs combined with earthquake and tsunami.

(2) Individual items

1) Assessment and prediction of the situation concerning disaster events.

Since the information on situation of reactors, etc. were not available due to break of communication system, etc. by earthquake and the information on amount of radioactive materials to be released form the facilities were not obtained, the prediction of the effects of radioactivity, SPEEDI's original function, was not be able to be conducted. In such situation, the Ministry of Education, Culture, Sports, Science and Technology carried out estimation of airborne concentration of radioactive materials and air absorbed dose rate in the surrounding environment every hour after 16:00 on March 11 on the assumption that radioactive materials in unit released amount or 1 Bq is released from Fukushima Dai-ichi NPS, and the Ministry of Education, Culture, Sports, Science and Technology, the Nuclear and Industrial Safety Agency and the Nuclear Safety Commission made an estimation by ERSS and SPEEDI on the basis of various assumptions for internal consideration. Because the SPEEDI estimation results were assumed to be used by related personnel for nuclear emergency preparedness, and as the estimation results during this period completely differed from the estimation based on the actual data and unnecessary confusion might be brought, the SPEEDI estimation were not released at first. In addition, as to information sharing of the said estimation results in the government, they were not provided to other related ministries and agencies.

After that, the Nuclear Safety Commission made an inverse estimation of release source in combination with dust sampling results and diffusion simulation by SPEEDI from the power station to the measurement point, and calculates concentration of radioactive materials and air dose rate around the facilities retroactively by entering into SPEEDI, and estimate the cumulative dosage of internal exposure and external exposure from the occurrence of accident by it, and the results are released on and after Match 23. Incidentally, this expectation method is the method of use of SPEEDI that was not assumed in the Basic Plan for Disaster Preparedness.

・ In this way, the calculation results of SPEEDI were not released at first when the accident occurred, but MEXT, the NISA and NSC Japan release the results of initial internal discussion sequentially on their websites on and after May 3. From the standpoint of contributing to evacuation of residents, etc., the results of utilization of SPEEDI should have been released and information should have been provided to related local governments in the early stages of occurrence of accident.

・ In terms of crisis management, the concrete methods of data utilization, information sharing and release, etc. should have been fully prepared including the estimation results on the certain assumption like this, etc., with the prospect that the larger the disaster, it may be more difficult to obtain information, as a general trend at disaster.

2) Emergency response measures for disaster events

a. Handling obstructive factors for on-site activities

In the emergency response, the dose limit for personnel engaged in radiation work increased, and radiation continually constitutes barriers to personnel response. Long-term personnel work under the influence of radiation might not have been concretely assumed, and deployment of equipment for radiation protection, development and instruction of remotely-operable equipments and facilities, etc. might not necessarily have been prepared adequately.

Earthquake and tsunami have a significant impact on the factors for restricting on-site activities, and it’s necessary to carry out activities while bewaring earthquake and tsunami, securing the power supply and doing provisional works in consideration of these influence,

eliminating traffic barriers on and outside the site, etc. It is thought that in the event of complex disasters like this, the secondary effect caused by surrounding damage should be considered as well as direct influence on site.

Moreover, in addition to explosion, fire or smoking that may be associated with it occurred at Units 3 and 4, and personnel working on site had to take shelter and work had to be interrupted. For this reason, it is considered important to improve and enhance the fire protection response such as reduction of combustible materials on a normal basis.

b. Information provision to related institutions

We needed to receive support from related institutions for emergency cooling of reactors, etc., and we should have provide information on current situation and outlook of disaster events, details necessary for receiving support, information necessary for on-site safety management, etc. adequately from the stage when requesting to the related institutions as a licensee of nuclear energy related activity.

Moreover, although the on-site arrangement center was placed on the gathering spot of dispatched personnel (J Village) by direction of the Prime Minister this time, the secretariat should have prepared from the stage of dispatching.

3) Protective action for residents, etc.

The existing Act on Special Measures Concerning Nuclear Emergency Preparedness generally assumes, based on the emergency preparedness guidelines of the NSC Japan, to implement in a step-by-step manner defining a certain scope in consideration of scale of abnormal event, climate condition, etc. in the event of actual application of the protection response including evaluation and sheltering. In addition, based on the indices provided in the emergency preparedness guidelines, in the national and local plan for disaster preparedness, it assumed to set the Emergency Planning Zone (EPZ) within approximately 10 kilometers of the NPS, use 10mSv for sheltering and 50mSv for evacuation (external exposure) as an indicator for the protective measures for residents, etc. These measures for resident protection based on the emergency preparedness guidelines of the NSC Japan on might have been developed so far with the main aim of protecting and reducing the influence around the NPS relatively in a short term.

Since the original functions of SPEEDI, etc. were not be able to be utilized in this response, concentric zone was set for direction of evacuation and sheltering provided on March 11, 12 and 15 on the assumption that large amount of radioactive materials or radiation, etc. were released around, and the zone was expanded in stages depending on progress of disaster events. Even under such restriction, we should have estimated the diffusion trend of radioactive materials, etc. by SPEEDI based on climate data, etc. on a certain assumption, and utilized as reference of evacuation activities, etc. As to cooperation and coordination with related local governments with regard to the zone setting, in evacuation direction on March 11 and 12, the national government partially arranged candidate refuges, prepared transportation, etc., and as a result residents, etc. could move to outside the evacuation area relatively smoothly. On this occasion, although adequate response was not taken to prior communication because it was emergency response in the situation that communication and transportation were stopped due to the disaster, on the other hand, in order to promote awareness of evacuation direction promptly, the Prime Minister held an interview soon after each direction and made an announcement about the details of direction, and information was transmitted utilizing television, radio, etc. In addition, information on the accident outline, the results of monitoring, etc. were not fully provided to the related local governments and residents due to the reasons mentioned in the above 1. (1) 2).

After that, based on that the radioactive materials released from the NPS were accumulated locally and cumulative dosage was high in some areas, the deleberate evacuation area was set in the shape different from concentric circle on April 22 according to the view newly shown in Attachment V-20 from a long-term standpoint. The emergency evacuation preparation zone was also set at the same time and the previous sheltering was lifted. Setting the deleberate evacuation area and the emergency evacuation preparation zone, setting the alert zone and implementation of temporary access to the evacuation zone were carried out after arranging details and steps with the related local governments. In addition, sheltering is originally positioned as a tentative averted measure, but it took more than one month till lift this time. Against it, based on the actual conditions that many residents evacuated voluntarily after providing direction of sheltering on March 15 and it became difficult to maintain the social life due to delay in commerce, logistics, etc. in the zones, the government took the response of voluntary evacuation promotion and life support on March 25, and as a result the next step on assumption of lengthening of the nuclear disaster should have been considered immediately.

Based on the responses mentioned above, it is thought to consider the framework of the Act

on Special Measures Concerning Nuclear Emergency Preparedness, allowances on the emergency preparedness guidelines, etc. On this occasion, it is necessary to organize concrete views and measures about setting the zones in the event when the nuclear disaster may influence widely in the long term, evacuation preparation for people requiring assistance during a disaster from the early stages, relation between emergency evacuation and prior announcement in the event when disaster events drastically make progress, requirements for change, release, etc. of the resident protection measures, etc.

4) Implementation structure for emergency response

a. Structure of the whole government

While response needs in disaster countermeasures are varied in response to manners of disasters so that desirable implementation structures are varied case by case, it is contemplated that the implementation structure adopted this time should be utilized in establishing future structures for nuclear emergency preparedness as an example of actions to an actually-occurred nuclear disaster and a complex disaster. This time, Integrated Headquarters for the Response to the Incident at the Fukushima Nuclear Power Stations (Government-TEPCO Integrated Response) was established in a situation where there was restriction in grasping a current state of reactor facilities and so on, and it has been contributing to facilitating information, etc.

In order to promote a variety of actions based on the structure of the whole government (see 1.(2) 3)a above), Secretariat of the Nuclear Emergency Response Headquarters Bureau has been set up in Emergency response Center (ERC) of NISA. Substantially, it was established and has been operated focused on emergency measures by nuclear business operators and NISA so far.

Recently, crisis management structure in Japan has been enhanced with a focus on the Office of the Prime Minister, also in actions in this time pursuant to the Act on Special Measures Concerning Nuclear Emergency Preparedness, sharing general information in the initial stage and coordinating roles, etc. were conducted via the convened team for emergency of the Office and liaison members of each ministry or agency in tandem with actions for the earthquake and tsunamis pursuant to the said Act. Also, regarding the matters required for focused actions such as livelihood support, etc., the organizations in charge have engaged in communication and coordination after they were enhanced.

In relation with the Local Nuclear Emergency Response Headquarters, the accident event rapidly proceeded in a situation where communication with the Off-site center due to the earthquake so that the initial gathering of information and communication were led by ERC. Also, as the disaster affected a broad range of area, more municipalities other than Fukushima Prefecture were related to restriction of food, etc., communication and coordination should have been performed by the Director-General of Local Nuclear Emergency Response Headquarters as a member of the Joint Council under normal conditions, but they have been done by the headquarters in Tokyo as an exception.

Based on the above situation, it is deemed to be important that we will address reviewing a function we should serve as a bureau in the whole with a use of functional teams and systems of ERC, and a way of communication and coordination with members, and related ministries and agencies, etc. so that we will operate the function in a quick and smooth manner.

Also, because in a time of disaster, the government organization related to Nuclear Emergency Preparedness is divided such as Nuclear Industry and Safety Agency, a primary regulatory body, NSC Japan which gives an advice from outside, and local governments and related Office and ministries which perform environmental monitoring, for example, there are unclear points on division of roles and where responsibility lies and so on, we could not responsively act to a massive nuclear accident like this one. It is necessary to review the total structure relating to the above crisis management as well as the implementation structure of safety regulation at normal times.

b. Local Nuclear Emergency Response Headquarters

(a) General situation

As preparation for earthquakes and tsunamis, etc. in power supplies, communication and reserves, etc. was not sufficient at the Off-site Center (OFC) where the Local Nuclear Emergency Response Headquarters was set up, and also, as enough information on the plant was not obtained as an external factor, expected function of information gathering and communication was not performed from the beginning.

Also, effect of radiation had not been considered specifically regarding, locations, architectural structures, and equipment, etc. responding to a situation like this time in the

conventional framework so that this prevented continuing activities at OFC.

Meanwhile, convening related parties and dispatching to the scene planned in the framework of the Act on Special Measures Concerning Nuclear Emergency Preparedness was also insufficient in the initial startup stage. This was partly because a thorough operation on a prior notice and a register of members to be convened and so on was not performed and is to be improved, there is also a background factor that many of current members are planned to be convened from a long distance, it is contemplated that we need to review a realistic response to a case in which a disaster event proceeds rapidly as in this time. Also, it is contemplated that there were engagements in preceded earthquake disaster measures, influence on communication and transportation means by the earthquake disaster, and so on so that this is deemed to be a point to be noted in a complex disaster.

This time it is contemplated that OFC failed to effectively function with these conditions combined so that there was a delay in a full-fledged operation of the Local Nuclear Emergency Response Headquarters. Also, following a later transfer of the Local Nuclear Emergency Response Headquarters, the main structure for emergency measures, etc. related to control disaster events shifted to Fukushima Nuclear Power Station Integrated Headquarters for Accident Countermeasures.

This time, accidents occurred at plural units so that commands from the Nuclear Emergency Response Headquarters were important. Meanwhile, based on the JCO Criticality Accident, it is planned that the Director-General of Local Nuclear Emergency Response Headquarters sets an evacuation area and so on, sharing information and talking with related cities, towns and villages at Joint Council for Nuclear Emergency Response, but the Council could not play an original role due to the restrictions as in 1(2)b. above.

In addition, as an operational problem for the Local Nuclear Emergency Response Headquarters, if a disaster effects on a broad range and for a long period as in this time, it is necessary to pay a special attention on safety management of people going in and out of OFC including media relations led by OFC planned in the Basic Plan of Disaster Countermeasures, for example. Also, while Directors-General of Emergency Preparedness Headquarters of related local governments (governors, and mayors of cities, towns and villages) are among members of the Joint Council, there is an aspect that a building of a related local government or its neighborhood is realistic as a place for continued coordination on protection activities for residents and measures for restoration, etc. (cf.

Local response headquarters for natural disasters are like this in many cases.). It is deemed to be important that we will review functions to be secured at OFC and alternative facilities, and members to be convened at the subject place noting on these points, and we will have a responsive operation performed responding to a progression and a scale of a disaster event, and a phase in disaster countermeasures.

(b) Restoration of OFC affected in the East Japan Great Earthquake Disaster, etc.

Affected OFCs in the East Japan Great Earthquake Disaster were not only in Fukushima but also in Onagawa, where buildings were damaged by tsunamis, and human damages on personnel also occurred.

Regarding the affected facilities, it is necessary to immediately restore their functions. In doing this, it is necessary to consider direct impacts on the subject facilities by the earthquake and tsunamis, secondary effects associated with the affected neighborhood area, and effect of radiation in the time of nuclear disaster and so on, and to determine a location of the Off-site Center facilities, architectural specifications, communication means with resistance to disaster, reserved materials and equipment, and requirements for alternative facilities.

Also, it is necessary to review other OSCs from the same viewpoint and take required measures.

5) Nuclear Disaster Countermeasures Drill

Considering emergency responses for this time, thorough review will be necessary also on Nuclear Disaster Countermeasures Drill including a startup of an initial system in a case of a rapid progression of a disaster event, a series of responses in a case where it leads to a severe accident and an emergency response covers a broad area and extends for a long time, and responses in a case in complex with natural disasters such as earthquakes and tsunamis, in tandem with plans and guidelines, etc. as the basis of the responses.

# VI. Discharge of radioactive materials to the environment

## 1. Evaluation of the amount of radioactive materials discharged to the air

### (1) Discharge of radioactive materials to the air

In this nuclear accident, along with the development of events, incidents such as the pressure venting of PCVs, explosions at reactor buildings and others resulted in radioactive materials being discharged to the air.

On May 5, TEPCO installed four ambient air filtration systems to reduce the concentration of radioactive materials in the reactor building, and also partly opened the double doors on the north side from May 8 to 9 to ventilate the building, to improve the working environment of the reactor building of Unit 1. As this raised the possibility discharges of small amounts of radioactive materials, environmental monitoring was strengthened both in and outside the site, but no change was detected in the either radiation dose rate or the concentration of radioactive materials in the air.

### (2) Estimation of the discharge of radioactive materials to the air

1) Analysis-based estimation

In order to conduct an INES estimation, NISA conducted an estimation using the result of an analysis on the reactor situation, etc. by the Incorporated Administrative Agency Japan Nuclear Energy Safety Organization (JNES) and estimated that the total discharge amounts from the reactors of Fukushima Dai-ichi NPS were approx. $1.3 \times 10^{17}$Bq for Iodine 131, and approx. $6.1 \times 10^{15}$ Bq for Cesium 137. Later, when JNES conducted another analysis of the reactor situation, etc. as described in Chapter IV, using the plant data, etc. obtained immediately after the earthquake, which NISA collected from TEPCO in a report on May 16, NISA estimated that the total discharge amounts from the reactors of Fukushima Dai-ichi NPS were approx. $1.6 \times 10^{17}$Bq for Iodine 131 and approx. $1.5 \times 10^{16}$Bq for Cesium 137.

This chapter, compares these estimated values compared with mainly monitoring data obtained from the site of Fukushima Dai-ichi NPS, and how radioactive materials discharged from the reactors were dispersed and how they had an impact on the surrounding environment.

After earthquake, the discharge of radioactive materials became evident early on the morning of March 12 when the air dose rate measured by a monitoring car near

MP-6(monitoring post No. 6 in the site of Fukushima Dai-ichi NPS) increased. It can be estimated that there was a leakage of radioactive materials from the PCV and a discharge of such materials to the air, as a slight decrease in the PCV pressure was observed in Unit 1 after an abnormal rise at this point. According to an analytical result, that fuel meltdown had already started.

Monitoring measurements performed afterwards at the same point found that the dose rate had increased until the noon of March 12, and D/W pressure had not significantly decreased until around 14:00 despite the venting operation that continued in Unit 1. It could be considered that non-condensable gases, such as noble gases, continued to be discharged from the melted fuel in the reactor into the environment through the S/C.

TEPCO judged at 14:30 on March 12 that venting succeeded and D/W pressure decreased. At this point, it is believed that radioactive materials including iodine, which was neither deposited on the reactor vessel and others, nor absorbed by the S/C, were discharged to the air and, as a result, due to a plume effect, a reading of about 1 mSv/h was observed from a measurement made near MP-4. In addition, a reading of 20 μSv/h was observed from a measurement made at the joint government building of City of Minami Soma by the Fukushima prefectural government that started in the evening, and it is believed that the plume was first blown south by a weak northerly wind and then diffused to the north by a strong southerly wind.

From 08:00 to 09:00 on March 13, the dose rate near MP-1, 4 and 6, increased significantly, and it is estimated that this was caused by the vent operation of Unit 3 performed after its fuel was exposed due to a decrease in the reactor water level. Also, this plume is assumed to have spread to the north under the weather conditions prevailing during this period, in which a weak westerly wind turned southerly. A measurement by Minami-soma City indicated a rise of about 1 μSv/h in the dose rate. A significant rise in the dose rate was confirmed near MP-1, 4 and 6 corresponded to the multiple decreases in the D/W pressure of Unit 3.

A rise in multiple dose rates was confirmed in the morning of March 14, but no information was obtained on events that might have been related to the discharges from each plant. For this reason, although causes of the dose rate increases are uncertain, it is plausible to consider that one of the causes can be the re-floating of deposited radioactive materials because the background dose rate increased at each measuring point due to radioactive materials discharged up to March 13.

An air dose rate of about 3 mSv/h was measured near MP-6 at 21:00 on March 14. This rate decreased once but increased again after 06:00 on March 15, and a dose rate of about 12 mSv/h was measured at 09:00 on the same day. In Unit 2, a decrease in D/W pressure was observed due to a wet venting at 21:00 on March 14, and it is estimated that radioactive materials were discharged from Unit 2 because of a blast sound from the unit at around 06:00 on March 15 and a subsequent S/C pressure decrease. At around the same time, however, an explosion occurred in the reactor building of Unit 4, thus a clear distinction cannot be made between them. Since wind often blew from the north in this period, the plume was very likely to have blown to the south, and agencies including the Japan Atomic Energy Agency (JAEA) in Tokai village, Ibaraki prefecture observed a rise in the dose rate and detected radioactive iodine, etc. in the atmosphere.

In addition, an increase in the air dose rate was observed near MP-6 at 23:00 on March 15 and at 12:00 on March 16. D/W pressure decreases were observed in Unit 3 and Unit 2 at respective times. It is estimated, therefore, that discharges occurred from Unit 3 and Unit 2 at these respective times.

2) Estimation by SPEEDI

Regarding the accident, the System for Prediction of Environmental Emergency Dose Information (SPEEDI) was unable to be utilized for some time to calculate the concentration of radioactive materials or air dose rates around the power station because information about the discharge sources was not obtained through measurements performed at reactor facilities. From March 16, the Nuclear Safety Commission of Japan (NSC Japan) considered an alternative method for measuring at reactor facilities through trial and error with assistance from researchers of JAEA, the independent administrative institution that had developed SPEEDI, and dispatched staff from the Nuclear Safety Technology Center under the instructions of MEXT. The NSC Japan combined the measurement (dust sampling) results of radioactive materials concentration in the environment with diffusion simulations by SPEEDI from the power station to measuring points, which enabled it to perform with a certain degree of reliability an inverse estimation on discharge source information as of the time the radioactive materials caught by dust sampling were discharged. The NSC Japan entered such estimated discharge source information into SPEEDI to obtain prior radioactive material concentrations and air dose rate distributions, and on March 23, April 11, 25 and 27 it announced the trial results of accumulated internal and external exposure doses from the

time the accident occurred. (See Attachment VI-1: SPEEDI trial estimation of total discharge of radioactive nuclides.)

2. Evaluation on the amount of radioactive materials discharged to the sea

(1) Leakage of radioactive materials from the power station

In Fukushima Dai-ichi NPS, the water containing dissolved radioactive materials that were released from inside the RPV leaked into the PCV. In addition, as a result of injecting water from outside in order to cool the reactors and Spent Fuel Pools, some of the injected water leaked out of the PCV and accumulated inside the reactor buildings and the turbine buildings. The management of the contaminated water in the reactor and turbine buildings became an important issue from the viewpoint of workability inside the buildings, and the management of contaminated water outside the buildings became an important issue from the viewpoint of preventing the release of radioactive materials into the environment.

TEPCO found at around 09:30 on April 2 that water with a reading of over 1,000 mSv/h had accumulated in a pit storing electric cables near the Intake Channel of Unit 2 and that there was a crack (about 20 cm) on the lateral surface of the pit, from which water was flowing out into the sea. From this reason, TEPCO took some measures such as pouring concrete, etc. and injecting soluble glass to stop water discharge and confirmed that the water outflow stopped at 05:38 on April 6.

TEPCO evaluated the amount of contaminated water that had flowed into the sea from Unit 2, including highly-concentrated radioactive materials (hereinafter referred to as “contaminated water”) and the Nuclear and Industrial Safety Agency (NISA) also confirmed it. (See Attachment VI-2: Outflow of radioactive water off the site near water intake of Unit 2 at Fukushima Daiichi Nuclear Power Station.)

On April 1, the day before the outflow was detected, the air dose rate near the sea surface around Unit 2 screen was confirmed as 1.5 mSv/h, which was the same as the surrounding background level. Two days after the outflow was confirmed, the air dose rate measured at almost the same place was 20 mSv/h. This makes it reasonable to assume that contaminated water flowed out in a period from April 1 to 6. The outflow rate was calculated as about 4.3 $m^3$/h based on photos, etc. The total amount of radioactive materials contained in the outflow of the contaminated water can be estimated at $4.7\times10^{15}$ Bq using measured values obtained via sampling.

TEPCO confirmed that the outflow from a pit near the Intake Channel of Unit 3 into the sea at 16:05 on May 11 and that it stopped around 18:45 on the same day.

TEPCO evaluated the amount of contaminated water that flowed out to the sea from Unit 3 and the NISA also confirmed it. (See Attachment VI-3: Outflow of radioactive water off the site near water intake of Unit 3 at Fukushima Daiichi Nuclear Power Station.)

As a result of the evaluation, the amount of radioactive materials discharged from Unit 3 was calculated as 250 $m^3$ in an outflow period of 41 hours (from 02:00 on May 10 till 19:00 on May 11). As for the concentration of contaminated water that flowed out into the sea, the total amount of radioactive materials contained in the outflow of contaminated water can be estimated at $2.0\times10^{13}$ Bq using a measured value of water that flowed into the pit.

To prevent further leakage of radioactive materials, TEPCO is taking measures such as securing storing places for waste water and installing treatment facilities for removing radioactive materials from waste water, closing off possible leaking places, and improving reactor cooling methods to reduce waste water.

(2) Discharge of radioactive materials to the sea from the power station

Because of a possible leakage of highly-concentrated radioactive waste water accumulated in the basement floor of the turbine building of Unit 2, TEPCO decided to discharge the low-level radioactive water accumulated in the Radioactive Waste Treatment Facilities to transfer the highly-concentrated radioactive waste water as an emergency measure, pursuant to Article 64 paragraph 1 of the Nuclear Regulation Act. In addition, to protect important equipment from the subsurface water entered into the building, TEPCO also discharged such subsurface water, including low-level radioactive waste water accumulated in the sub-drains of Units 5 and 6. Therefore, NISA requested TEPCO to report on the facts, and draw up an impact assessment and discharge methods related to the discharge to the sea, pursuant to Article 67 paragraph 1 of the above Act. NISA confirmed the report details and obtained technical advice on the discharge to the sea from NSC Japan as an emergency measure.

TEPCO discharged about 10,393 tons from the Radioactive Waste Treatment Facilities and sub-drains of Units 5 and 6 from April 4 to 10. The total amount of radioactive materials is estimated at about $1.5\times10^{11}$ Bq based on the amount discharged during this period. (See

Attachment VI-4: Result of discharge of low level radioactive accumulated water from Fukushima Daiichi Nuclear Power Station to the sea.)

To check the environmental impact of the above (1) and (2), TEPCO carried out some measures including strengthening coastal sea area monitoring and installing silt screens (leakage protective fences). (See Attachment VI-5: Countermeasures for preventing diffusion of liquid containing radioactive material.)

Regarding the above, the Japanese government deeply regretted that there was no choice but to discharge water that contained radioactive materials despite their low concentration. (Refer to Chapter IX. 4. (3).)

(3) Sea diffusion simulation

MEXT performed predictive calculations on the diffusion of radioactive materials using the supercomputer at the Japan Agency for Marine-Earth Science and Technology (JAMSTEC) based on prior measured values of coastal water monitoring performed on April 12, 16, 29, and on May 9 and 24, and announced the outcome of a simulation of the radioactive concentration distribution from the Fukushima Dai-ichi NPS for the coming 2 months or so.

The model used for the simulation calculates the way each floating particle given under initial conditions is diffused on the sea-surface divided into grids, each with the area of 8 km square, by tides and winds using a diffusion formula, which uses estimated data on tides for about the following two months from the day before a predictive calculation is made and forecast data of winds for a week from the day before the predictive calculation is made, as well as the average wind data of a period from a week after the day before the predictive calculation is made until two months after that week. In other words, the distribution of the radioactive concentration is estimated based on the estimated diffusion of floating particles on the sea surface.

It estimated that the distributed radioactive concentration in all sea areas in mid-May was below the initial detection limit (about 10 Bq/L for both radioactive iodine and cesium) (There would be no sea area where the distribution of radioactive concentration exceeded 10Bq/L.)

For this reason, to understand the distribution of radioactive concentration in more detail,

MEXT decided to analyze a wider area with lower detection limits and selected new sampling points based on the above estimation. This “wider sea area monitoring” was announced on May 6.

The distribution of the concentration of the radioactive area after widening the sampling area was almost as estimated, and the detected radioactive concentration announced by MEXT on May 20 for the first time after widening fell almost between the old detection limit (10 Bq/L) and the new detection limit (6 Bq/L of cesium 134).

However, the simulation does not always guarantee the actual measured values of concentration themselves because it is a model that predicts distribution, not one that predicts the level of the concentration itself. In addition, differences between the distribution and the actually measured values are caused by that fact that errors become bigger as the predictive time gets longer, due to multiple restrictions including the impossibility of thorough reproduction of the actual flow even by incorporating observed values into the model, together with the generation of errors by using average winds of the period after using winds for estimation for about a week only. There is a need to perform constant reviews to realize estimates that are far closer to the real values, checking actually measured values of the latest monitoring results and obtaining a mutual evaluation on simulations by other calculation codes, too.

# VII. Situation of radiation exposure

## 1. Situation of radiation exposure concerning radiation workers and other related workers

### (1) Dose limit for radiation workers

#### 1) Provision of dose limit prior to the accident

Regarding the dose limit, etc., the Radiation Review Council established in the Ministry of Education, Culture, Sports, Science and Technology has studied recommendations made by the International Committee on Radiation Protection (ICRP) and its possible application in Japan, on which it has recommended its views. Under the relevant laws, based on the ICRP 1990 Recommendations (Pub. 60), the dose limit for radiation workers is set at an effective dose of 100 mSv over 5 years and 50 mSv per year. In addition to this limit, the dose limit for women is regulated at 5 mSv over 3 months. (Details about the dose limit can be found in the supplementary materials.)

The dose limit for radiation workers engaged in emergency work is regulated by the relevant laws at 100 mSv for an effective dose, at an equivalent dose of 300 mSv for optic lenses, and at an equivalent dose of 1 Sv to the skin. (See the supplementary materials for detailed regulations.)

#### 2) Revision of dose limit in emergencies based on the accident

In consideration of the situation of this accident, the dose limit for radiation workers in emergencies has been revised due to the need for work in preventing further worsening of the nuclear disaster. In the areas where emergency measures to combat the nuclear emergency were implemented from the day when the Declaration of a Nuclear Emergency was issued according to the Act on Special Measures Concerning Nuclear Emergency Preparedness until the day when the Declaration of Cancellation is issued, the effective dose of 100mSv was raised to 250mSv in the event of an unavoidable emergency, which took effect on March 14. The ICRP 1990 Recommendations (Pub. 60) stipulating a dose of 500 mSv for persons engaged in emergency rescue operations which is aimed at avoiding definitive impact on such persons and others was taken into consideration when determining the basis for the 250 mSv dose limit.

Based on the Act on Technical Standards for the Prevention of Radiation Disasters, in revising the dose limit, the President of the National Personnel Authority, the Minister of the Ministry of Health, Labour and Welfare, and the Minister of the Ministry of Economy, Trade and Industry consulted the Radiation Review Council established in the Ministry of Education, Culture, Sports, Science and Technology on the revision of the dose limit to which the Radiation Review Council's recommended opinion was that such a revision was appropriate.

Furthermore, the Ministry of Health, Labour and Welfare has issued documents for administrative guidance on radiation doses for workers previously engaged in emergency work and have hence been engaged in other work than that of emergency work which nevertheless exposes them to radiation. (See the guidance documents in the supplementary materials for more details.)

(2) Radiation control measures in nuclear power stations

Tokyo Electric Power Co. Inc. (TEPCO) had been performing radiation control measures for the purpose of minimizing radiation doses received by workers by assessing the radiation levels in the "radiation controlled areas" such as the reactor buildings and turbine buildings, and by confirming individual radiation operational plans for each operation. In addition, only personnel confirmed by TEPCO as being designated and registered as radiation workers and granted proper permits were able to work in the controlled area.

Normally, at Fukushima Dai-ichi Nuclear Power Station, a system was established and employed so that each worker was lent and wore an Alarm Pocket Dosimeter (APD) to measure radiation dose at work so that each worker was identified on entering a control area, and the dose of the APD was read after completion of the work which was automatically recorded, so that calculations for a worker's individual daily dose, or by company, or by total individual doses per month, per year, etc. could be obtained.

Furthermore, when entering and leaving a controlled area (in each building), dose readings were taken in the building next to the entrance of each building, as well as when putting on protection equipment and an APD just before entering a controlled area.

1) Radiation control measures by TEPCO after the accident

A. System of radiation control measures

a) System of radiation control measures at Fukushima Dai-ichi Nuclear Power Station

In this accident, tsunamis reached buildings facing the sea coast which provide access to the controlled areas as described in (2), depriving the function of the radiation control system, and rendering many of the APDs and dose reading devices unusable as they became submerged in seawater.

Also, due to the increase of radiation and contamination levels in the power station site, it was decided that workers centralize and conduct all operations in TEPCO's response headquarters established in the quake-proof building, and the lending of APDs and recording of doses were performed in the quake-proof building.

From March 11, shortly after the earthquake, dose management for workers had to be performed manually by recording the names of individuals and their daily dose values on paper to accumulate data. Moreover, such daily individual doses which were manually recorded had to be manually inputted into PCs (using Excel sheets) and saved as a database.

Because many APDs became unusable for reasons described above, not every worker was able to wear an APD and TEPCO has thus been managing radiation doses of all the personnel by making leaders of operational groups wear APDs on behalf of the entire group. As controlling workers' radiation exposure is very important to ensure safety on the site, the Nuclear and Industry Safety Agency (NISA) gave oral instructions to TEPCO to make every effort to manage its workers' radiation exposure and dose. After receiving these instructions, TEPCO had procured the necessary dosimeters by April 1 so that all the workers conducting operations carry portable dosimeters.

Furthermore, the evaluation of external exposure during work in the quake-proof building is based on the length of period of stay because workers couldn't wear APDs when inside the building. Moreover, even though the concentration of radioactive materials within the air of the quake-proof building exceeded the limit of concentration in the air shortly after the earthquake, appropriate protection equipment such as protection masks were not adorned resulting in workers staying in the building inhaling radioactive materials.

On April 14, about one month after the accident occurred, radiation control measures close to that of the previous dose management (the system in which individual names and dose readings are automatically recorded) became available since the system of radiation control measures was nearly completely restored.

b) System of radiation control measures in J Village

Shortly after the accident from March 17, J Village, a soccer training facility located at a point about 20 km south of Fukushima Dai-ichi Nuclear Power Station, was utilized as a place for preparing workers for entry into Fukushima Dai-ichi Nuclear Power Station, where they put on their protection equipment, and performed decontamination tests when leaving, etc.

For radiation workers who don't go through the quake-proof building but nevertheless work at Fukushima Dai-ichi Nuclear Power Station, a system was established for such workers to attach ADPs (there are several kinds of dosimeters due to hasty procurement and assistance received from plural organizations) at J Village before going to work at the site in Fukushima Dai-ichi Nuclear Power Station, and to record doses for the day when returning dosimeters upon leaving. For this reason, dose readings in J Village have been continued to be manually calculated since the beginning of the accident. TEPCO is planning to introduce an individual recognition system using bar codes in J Village from early June.

B. Wearing of radiation protection equipment, work management, etc.

Due to the high concentration of radioactive materials over the entire site of Fukushima Dai-ichi Nuclear Power Station, TEPCO requires workers to wear Tyvek and other protection clothes, gloves, and protection masks. It also requires the wearing of appropriate protection clothes (anoraks, etc.), rubber gloves, and other protective clothes according to weather conditions and contamination levels of the work sites.

As for the quake-proof building, it was difficult to prevent the inflow of radioactive materials because the entrance door was not a airtight structure, and the door was slightly distorted to leave a gap by the hydrogen explosions of Units 1 and 3, and as there were no particular protection equipment installed in the building against such an eventuality, the inhalation of radioactive materials by workers occurred. Since countermeasures to

decrease the concentration of radioactive materials in the air of the building such as connecting a unit house installed with an ambient air filtration system with charcoal filters, to the entrance of the quake-proof building were implemented, the concentration of radioactive materials has been kept at low levels to the extent that it has been unnecessary to implement protection measures.

In addition, a prior survey was conducted and workers were informed of developing a work plan in high radiation areas, etc.

(3) Status of radiation exposure

The status of exposure doses for the workers engaged in emergency work at Fukushima Dai-ichi Nuclear Power Station as of May 23 is that there were approximately 7,800 people who entered the site and were exposed to approximately 7.7 mSv on average. There were thirty people were recorded as receiving doses over 100 mSv. The compiled results of exposure doses are as shown in the supplementary materials.

Cases of violations of laws occurred in this accident, and the outlines are as follows. On March 24, it was confirmed that two out of three workers involved in work for laying electric cables on the 1st and basement floors of the turbine building of Unit No. 3 were wearing low-cut shoes and attached radioactive material to the skin of their feet when stepping into puddles of radioactive water. Although TEPCO decontaminated their exposed skin, it was decided that there was a possibility of beta ray burns and the two workers were transported to Fukushima Medical University Hospital. After examination on the next day of March 25, all three workers including the two that were exposed to the puddle were further transported to an independent administrative institution, the National Institute of Radiological Sciences (NIRS). Immediately after their arrival NIRS performed checkups, etc. after which the workers were also re-examined on April 11 for follow-ups and it has been confirmed that these three workers are not were suffering any health issues. From the results of the evaluations of the exposure doses of their skin, it is estimated that they were exposed to less than 2 to 3 Sv.

Moreover, on April 27, in the course of confirming radiation exposures over a period of three months, TEPCO confirmed that a female employee had been exposed to more than 5 mSv over a period of 3 months, which is above the legally stipulated dose limit (see the supplementary materials for more details.). As some of the people engaged in work were not designated as radiation workers, their exposure dose must not exceed the 1 mSv dose limit set for the public.

For this reason, NISA gave a strict warning to TEPCO, and instructed it to investigate the cause of the exposure, to develop measures to prevent any reoccurrence, to verify the system of radiation control measures in Fukushima Dai-ichi Nuclear Power Station, and to develop appropriate counter-measures based on them. Following the instruction on May 2, TEPCO submitted a report. NISA received the report, and with a view to implement appropriate radiation control measures for radiation workers to ensure their occupational safety and health management, it responded by issuing an instruction to TEPCO on May 25 ordering it to strive to further improve its measures so that it will perform appropriate radiation control measures for radiation workers, and observe safety regulations at Fukushima- Dai-ichi Nuclear Power Station and Fukushima Dai-ni Nuclear Power Station.(See the supplementary materials for a detailed background.)

Also, the government has issued instructions to TEPCO regarding (i) exposure dose management for workers including internal exposure, thorough implementation of temporary health examinations, etc. as decided in the "Policy for Immediate Actions for the Assistance of Nuclear Sufferers" by the Nuclear Emergency Response Headquarters on May 17, and has made it a rule to require it to periodically report its implementation status. In addition, (ii) certain emergency works are required to be reported in advance to the Labor Standards Inspection Office to have their exposure control for workers, etc. confirmed.

Moreover, the policy requires (iii) creating a database capable of tracking all the workers engaged in emergency works even after they have their current jobs if their exposure doses, etc. over the long-term, and conducting long-term health management. On May 20 the Ministry of Health, Labour and Welfare established the "Promotion office for the measures for the health management and other things of workers of Fukushima Dai-ichi Nuclear Power Station" to promote the measures from (i) to (iii).

Others

Besides radiation control measures, as it is important to establish and maintain the working environment of workers, TEPCO is working to improve the occupational safety, health management and the living environment for workers at Fukushima Dai-ichi Nuclear Power Station and Fukushima Dai-ni Nuclear Power Station. (See supplementary materials.)

(4) Radiation control measures for employees of local and national government engaged in restoration works, etc.

1) Radiation control measures by the Self-Defense Forces of Japan

Self-Defense Force members working within 30km of Fukushima Dai-ichi Nuclear Power Station estimate their expected exposure dose in advance from the latest monitoring results in the planned activity area or neighborhood and planned time of the activity, and take necessary appropriate measures such as wearing simple protection clothes (Tyvek) and so on.

The SPF members also monitor their exposure using a dose rate meter as necessary and confirm their cumulative dose during their activity.

The upper limit of the cumulative exposure dose for an individual member is 50 mSv (the limit for exposure of radiation workers, but for female members, it is 5 mSv over a 3-month period), and if there is a possibility that exposure doses will exceed 30 mSv (or 3 mSv for female members) during the activity members temporally suspend their activity and return considering a turn back dose (a dose capable of returning within the limit of cumulative exposure dose).

2) Status of radiation exposure

While exposure doses are measured for members of the Self-Defense Forces finishing activities within 30km from Fukushima Dai-ichi Nuclear Power Station, there were no incidences of exposure exceeding 50 mSv as of May 28.

2. Response to radiation exposure of residents in the vicinity and the overall situation

(1) Distribution of stable iodine, etc.

1) Situation of acquiring stable iodine

Fukushima Prefecture distributed necessary iodine (pills: about 1.51 million pills (for about 0.75 million people), powder: about 6,100 g (for about 0.12 to 0.18 million people)) to cities, towns and villages with administrative districts within 50 km of the Fukushima Dai-ichi Nuclear Power Station.

This amount exceeds the need for 0.69 million people, or the population equivalent (of those under 40 years old) to the cities, towns and villages within the 50 km radius of Fukushima Dai-ichi Nuclear Power Station.

2) Policy for distribution to evacuated residents and their administration of stable iodine

The Chief of Nuclear Emergency Response Headquarters will, on receiving advice from the Nuclear Safety Commission, give instructions to the related cities, towns and villages on the dose of stable iodine by evacuated residents, although the designated cities, towns and villages will distribute stable iodine to residents for administration in the presence of medical experts. This is due to concerns for side effects associated with the dose administration such as allergies.

Stable iodine is stored in the offices of cities, towns and villages and it is necessary to decide on the procedure to precisely distribute the stable iodine to residents in the event of a real evacuation. In this case, because the preliminary distribution of stable iodine to residents is not appropriate, the cities, towns and villages are to adopt necessary measures so that they can securely distribute iodine to their residents according to various types of evacuation as described below. It is also required that the local government do not unnecessarily stir anxiety among residents while keeping them fully informed.

(Evacuation patterns)

i. Residents using evacuation buses:
   Distributed and administrated at the evacuation site or in the buses
ii. Hospitalized residents in hospitals, etc.:
   Distributed and administered in a hospital, etc. or a bus
iii. Residents evacuating on their own:
   Distributed and administered at a doctor's discretion (age and evacuation time, etc. are considered) in an evacuation site or at a screening point

3) Situation responses to directions on the administrate of stable iodine

On March 12, instructions were given by the Chief of the Nuclear Emergency Response Local Headquarters to the Governor of Fukushima Prefecture and 43 surrounding towns to evacuate residents from within 20 km. In the process of evacuation, the possibility of radiation dose increase among the people being evacuated became undeniable due to the hydrogen explosion at Unit No. 3 (March 14), etc. For this reason, on March 16 the Chief of the Nuclear Emergency Response Local Headquarters instructed the Governor of Fukushima Prefecture and others to have residents take stable iodine when evacuating from within the 20 km radius of the nuclear power plant taking into account the technical

advice from the Nuclear Safety Commission recommending that stable iodine be administered to residents remaining in the area (within 20 km) upon evacuation. Although the completion of evacuation was acknowledged, this instruction was given as cautionary measure assuming there might be cases in which residents who couldn't evacuate were left behind. But as a matter of fact no residents took stable iodine based on this instruction because the evacuation had already been completed at the time the instruction was issued. Also, on March 21, the Chief instructed the Governor on precautions necessary in administering stable iodine.

(2) Standards and methods for screening and decontamination

On March 13, Fukushima Prefecture determined the screening level in the case of decontaminating the whole body at 100,000 cpm and that partial decontamination by wiping would be performed in case of detection numerical values greater than 13,000 cpm but less than 100,000 cpm, based on the opinions of experts in radiation medicine dispatched from the Ministry of Education, Culture, Sports, Science and Technology, and doctors and others from the National Institute of Radiological Sciences, and the handling by Fukushima Medical University.

Meanwhile, on March 19, the Nuclear Safety Commission determined the screening level for decontamination at 100,000 cpm. This revised to the screening level to 1 μSv/h (dose rate at a distance of 10 cm), which is a standard of decontamination for contamination on the surface of the body for general residents as stipulated by the International Atomic Energy Agency (IAEA) in the *Manual for First Responders to a Radiological Emergency* (VII 2-1).

Note: Measured values are those measured using Type TGS-136 GM Survey Meter (5cm bore).

(3) Status of radiation exposure for residents in the vicinity

With regard to the contamination of residents, Fukushima Prefecture has been implementing screening surveys for residents in the prefecture including people evacuated from within the 20 km radius of the power plant in cooperation with the Nuclear Emergency Response Local Headquarters. Most of the 191,988 people checked as of May 23 were under the 100,000 cpm limit. Decontamination was performed for 102 people exceeding 100,000 cpm but their contamination levels fell to levels of no concern after such decontamination.

Also, from March 26 through March 30 the Nuclear Emergency Response Local Headquarters implemented a survey on thyroid exposure for infants in Iwaki City, Kawamata Town and Iidate Village in cooperation with Fukushima Prefecture in order to understand more precisely the current exposure dose, particularly the health effects to infants who are highly-sensitive. In its implementation, exposure of infants was measured in areas where residents were instructed to stay in-house or in areas whose equivalent dose in thyroid glands was rated as high by the estimation derived by SPEEDI (announced on March 23), and technical advice was received from the Nuclear Safety Commission on the measuring method. From the results among the 1,080 children from 0 to 15 years old that were surveyed for thyroid exposure, there were no children exceeding the screening level of 0.2 μSv/h (equivalent to 100 mSv as thyroid gland equivalent dose for a 1-year old baby).

3. Evaluation of the status of radiation exposure

The purpose of radiation protection is to prevent the occurrence of a deterministic effect on an individual, and unfailingly take all reasonable measures to limit the occurrence of stochastic effects.

(1) Evaluation of the status of radiation exposure by operators, local and national governments

Operators are responsible for the appropriate performance of radiation control measures for radiation workers based on a predetermined plan. In this accident, tsunamis rendered APDs unusable and the functionality of system of radiation control measures was lost. Moreover, the radiation and contamination levels not only within the nuclear power station facilities but also on the site increased along with the progress of the accident.

Performing precise control of dosages is the basis of performing appropriate radiation control measures for radiation workers. However, because of the insufficient number of dosimeters for the above reasons, such actions as only equipping work unit leaders dealing with work that involved relatively low environmental doses were taken. TEPCO should have acted promptly to make it possible to equip every person with a dosimeter.

Also, because the evaluations for individual doses rely upon manual recording, and evaluations are based on behavior record and because measuring the doses of each individual was impossible, it took considerable time to establish a system for radiation control measures as the same level as before.

Moreover, the delay in management for preventing radioactive materials from entering the quake-proof buildings and that of measuring of the concentration of radioactive materials in the air within the building resulted in increasing the risk of internal exposure.

At Fukushima Dai-ichi Nuclear Power Station, whole body counters (WBC) became unusable due to the increase of the background level. Therefore, one WBC mounted on a vehicle has been borrowed and used for measurement while WBC measurement is also being performed at another power station, upon which internal exposure is evaluated, but there are too many people to be measured. Thus, a sufficient measurement system has not been established despite parallel efforts to measure WBC at different plants and assess internal exposure. After July, TEPCO will transfer the WBC at Fukushima Dai-ichi Nuclear Power Station and Fukushima Dai-ni Nuclear Power Station to J Village, and plans to coordinate a measurement system at J Village by purchasing a new WBC and others.

At Fukushima Dai-ichi Nuclear Power Station, along with the increase of the radiation dose, the situation required controlling the non-controlled area in addition to the controlled areas. Against this background, workers who were not designated as radiation workers performed work in places that should be controlled at the same level as controlled area and resulted in the exposure exceeding 1 mSv per year, or the yearly dose limit for the public. This is because, in the beginning, individual dose controls were not changed in line with the enlargement of target area for radiation control measures.

(2) Evaluation of the situation of radiation exposure of residents in the vicinity

Regarding the evaluation of radiation doses received by residents, Fukushima Prefecture will hereafter lead the conduction of surveys in target areas in cooperation with related government offices and the National Institute of Radiological Sciences and others and will estimate and evaluate the radiation dose received by each resident by comparing it to the results of the situation for the release of radioactive materials separately surveyed, etc.

The people to be surveyed are estimated to be about 2 million residents of Fukushima Prefecture. Since the evacuated people have been dispersed by the earthquake and accident, the survey plans to start with people who have a high probability to be surveyed such as current residents, and in principle, evacuated people whose residence after their evacuation is easily obtained.

(3) Evaluation of emergency medical system for exposures

As a precaution, there were some cases, in which some people engaged in emergency work for this accident at Fukushima Dai-ichi Nuclear Power Station, etc. were transported to an independent administrative institution, the National Institute of Radiological Sciences, which is a tertiary emergency medical institution for exposure but there were no case serious enough to be treated as tertiary exposure.

Because this nuclear disaster caused by the Great East Japan Earthquake was a disaster which required responses beyond the assumptions of conventional nuclear disaster countermeasures, and required responses to earthquakes and tsunamis at the same time, the local governments first strengthened their systems by coordinating with medical institutions such as university hospitals nationwide on such issues as how to cope with the high numbers of injured or sick patients.

As such, Fukushima Medical University, an institution for secondary exposure, and other medical institutions in the prefecture were obliged to work under complex emergency conditions such as simultaneously performing disaster medical measures including dispatching on-site disaster medical care. Therefore there is a possibility that these institutions could not sufficiently respond when emergency response against radiological exposure was really needed compared to the anticipated response in the field by the regional disaster prevention plans, which were planned in advance.

However, as the Nuclear Emergency Response Local Headquarters led the immediate restructuring of the medical system for exposure and strengthened the response system in cooperation with related institutions such as university hospitals including tertiary medical institutions for exposure, the medical system for exposure is considered to be performing its necessary functions.

## VIII. Cooperation with the international community

### Introduction

Japan has placed emphasis on the following points in relation to the international community over the accidents of Fukushima Dai-ichi Nuclear Power Station (NPS) of Tokyo Electric Power Co. Inc. (TEPCO).

Firstly, the Japanese Government has made efforts, as a matter of top priority, to keep transparency by providing the international community with the information it has obtained as quickly and accurately as possible. Some of the communications, including delays of notification to neighboring countries and regions on the discharge of low-level radioactive accumulated water into the sea, have had to be improved. Subsequently, however, the Japanese Government has been improving its ways for communication delivery. (Please refer to IX below)

Regarding assistance from other countries around the world, Japan has recognized the necessity of bringing to bear the knowledge and experience accumulated within the global community on the accident, and Japan has worked closely together with those countries and has received supplies, equipment and expertise provided by them. The Japanese Government sincerely appreciates the kind and generous assistance delivered by so many countries around the world. Initially, it took some time for the Japanese Government to identify the demand for such assistance within Japan, but the Japanese Government brought about solutions by building a collaborative structure within the Government and with those countries providing assistance.

From the standpoint that Japan puts emphasis on cooperation with international organizations, the Japanese government has worked closely with international organizations including the International Atomic Energy Agency (IAEA), the Nuclear Energy Agency of the Organization for Economic Co-operation and Development (OECD/NEA), the Food and Agriculture Organization (FAO), and the World Health Organization (WHO). A summary of the assistance received from other countries and collaborative activities with international organizations is listed below.

### 1. Assistance from other countries

Facing the unprecedented scale of the accidents that befell the NPS, utilization of the

accumulated experience and knowledge of the countries that operate NPSs is a very important constituent of the efforts being taken to stabilize and settle the situation from the accidents. Japan has actively utilized assistance from other countries including the provision of supplies and equipment, as well as experts.

(1) Utilization of expert knowledge

After the accident occurred, many experts visited Japan from such countries as the United States, France, Russia, the Republic of Korea, China and the United Kingdom to discuss the relevant issues with the Japanese governmental agencies and TEPCO. The Japanese side has received much advice especially on how to stabilize the reactors and spent fuel pools, how to prevent diffusion of radioactive materials and how to cope with radioactive accumulated water.

(2) Supplies and equipment from other countries

Japan has actively received supplies and equipment based on proposals offered by other countries, as the introduction of such special supplies and equipment and others was required for stabilization and settlement measures of the situation, evacuation of the residents and so on. Pumps and fire engines to be used by TEPCO for cooling the nuclear reactors and other facilities and barges for transferring fresh water and such were provided to stabilize nuclear reactors and spent fuel pools, which was an urgent issue in the early stages of the accident. Remote control robots were provided to be used in places where workers' safe access was difficult due to high levels of radiation. Japan has received dosimeters, protection suits, protection masks and such for individual workers to protect them from radiation, and photos of reactors and such taken from aircraft and such to explore effective measures. Japan also received supplies and equipment needed to process massive amounts of water containing radioactive materials. Dosimeters and protection suits for individual residents were also provided to support residents evacuated from the evacuation area, and germanium semiconductor detectors and other tools to analyze the radiation impact on the soil, water, and agricultural products. Nearly 30 countries and international organizations offered such assistance. After considering their necessity in our emergency response efforts, Japan received supplies and equipment from 10 countries and 2 international organizations in total.

2. Cooperation with international organizations

The Japanese Government has cooperated with international organizations to utilize their expertise and experience with a view to promptly stabilizing and settling the situation. From

March 18 onward, the IAEA sent to Japan the radiation measurement expert teams including a marine expert, the food monitoring team jointly with the FAO, and boiling water reactor (BWR) experts. (Please refer to Attachment VIII-1) Based on the agreement between the Japanese Government and the IAEA, the Japanese Government accepted the International Fact-Finding Expert Mission. Experts of the Nuclear Energy Agency (NEA) of the Organization for Economic Co-operation and Development (OECD) and other organizations related to nuclear energy have visited and advised Japan.

Also, international organizations such as the IAEA, the WHO, the ICAO (International Civil Aviation Organization), the IMO (the International Maritime Organization), as well as the International Commission on Radiological Protection (ICRP) have provided, from technical standpoints, timely and correct information to the global community, which, for example, showed that radiation levels in and around airports and seaports in Japan did not present health or transportation safety hazards, and provided appropriate advice to those who travel to Japan.

3. Evaluation of cooperation with the international community

(1) As mentioned in the 1 above, supplies and equipment provided from many countries to Japan to respond to the accident at Fukushima Dai-ichi NPS played an extremely important role in stabilizing the situation of reactors and other facilities.

(2) When receiving supplies and equipment, the main reason for taking some time to identify such needs within Japan initially was that we did not have a specific structure in the Japanese Government to accommodate such assistance offered by other countries with the domestic needs. Hence, Ministry of Foreign Affairs had to communicate with relevant ministries and agencies for each of the offer to ask them consider whether the offer matches their needs or not.

(3) In conjunction with the provision of various kinds of supplies and equipment to the sites, in many cases, information regarding those supplies and equipment, not only their names but also their specifications, such as the arm length of pump trucks, quantity and length of time required to deliver them, etc., were very important. Initially, we occasionally had difficulties in obtaining such information.

(4) Regarding the abovementioned issues, the IAEA established the Response Assistance

Network (RANET) for emergencies to provide an important framework for offering assistance during nuclear emergencies and recommends member countries to register the names of organizations that can provide support and their fields of expertise that they can contribute to. The Japanese Government assumes the RANET would enable to respond to any accident more quickly and effectively if more specific information were registered such as the specifications of supplies and equipment which can be provided and their quantity. Although the Japanese Government itself has registered only three organizations specialized in radiotherapy and other fields so far, the Japanese Government hopes to contribute to the further development of the RANET by further promoting and expanding the scope of it.

# IX. Communication on the accident

## 1. Communication with residents in the vicinity and the general public in Japan

### (1) Expectations for communication

Information on any accident provided in emergency is unavoidable to be one-way communication. However, in the stage when the emergency has been reduced in some degree, two-way communication is necessary to appropriately provide information which meets the need of the receivers. In addition, all of transparency, accuracy and promptness are important in the communication on any accident with people.

For the current accident, we have taken communication opportunities such as press releases and provided press conferences to provide information necessary for the receivers. Some improvements have been made during the process, as in the case of the joint press conferences to be mentioned below. However, we need to continue to make every effort in the process by exploring how to make the contents of communication easier to be understood.

Communicating the progress of the accident and the view of the government with general public, etc. through press releases and press conferences is only one way of the two-way communication in a sense. Only when absorbing the feedback and reflect it in the activities of the government and other organizations, communication will be established. In this context, questions and answers at such press conferences, inquiries from press at the Emergency Response Center (hereinafter referred to as “ERC”) and general counseling service (hereinafter referred to as “counseling service”) for general public to be mentioned below are prerequisite for such two-way communication.

Overall evaluation whether communication has been sufficiently made has not been implemented yet, but by examining the comments and feedback from experts and citizens delivered to counseling service, a certain level of review is stated below.

### (2) Press release and press conference

1) Since the occurrence of the accident, the Chief Cabinet Secretary has provided information on the accident status and the government views on the accident directly to the general public at the press conferences. Questions on the accident have been asked at almost every

press conference, if including those related to support for accident sufferers and delivered the views at each time.

2) The Nuclear Inspection and Safety Agency (hereinafter referred to as "NISA") distributed "Regarding the Impact on Nuclear Facilities by the Earthquake (1st release)" via "Mobile NISA" at 15:16 on March 11 (Japan time; the same shall apply hereinafter), 30 minutes after the occurrence of Tohoku Region - Off the Pacific Ocean Earthquake. Subsequently, the first release of "Seismic Damage Information" was released and press conference was conducted by a spokesman of NISA.

   The press releases and press conferences have continued after the occurrence of a nuclear accident at Fukushima Dai-ichi NPS. We sent out 155 press releases and held 182 press conferences by NISA spokespersons as of May 31, 2011. We held a daily average of seven press conferences over three days after the occurrence of the accident. As the situation stabilized, the frequency was decreased to the current once or twice a day.

   These press conferences are a precious tool to directly communicate with citizens using visual images. It is necessary to use more audience-friendly ways of communication than the materials used for press releases to be mentioned below. A considerable number of experts and callers to the counseling service said that creative efforts were not made sufficiently.

   Also, some criticized that the briefings have focused on incidents of the accident and very few explanation about "Things to keep in your mind for evacuation," which is extremely important for securing safety in the suffered area and citizens.

3) The Ministry of Education, Culture, Sports, Science and Technology (hereinafter referred to as "MEXT") has conducted an environmental radioactivity survey in all the prefectures of Japan and has worked with Fukushima Prefecture, the Japan Atomic Energy Agency, power operators and other organizations to conduct comprehensive monitoring including surveys of air dose rates, dust in the atmosphere and soil in the surrounding area of Fukushima Dai-ichi NPS. Such information has been shared at press conferences and other occasions.

4) The Nuclear Safety Commission (hereinafter referred to as "NSC Japan") held press conference every day for 31 days from March 25 to April 24, and NSC Japan themselves including the Chairman of NSC Japan provided an explanation on advice made by NSC

Japan and assessment of environmental monitoring results conducted by MEXT. Moreover, press conference is held after NSC Japan meeting eight times in total from April 25 (as of May 19).

5) Also, the nuclear operator, Tokyo Electric Power Co. Inc. (hereinafter referred to as "TEPCO") has held press conferences on the current nuclear accidents. Daily press conferences by NISA and TEPCO held at different timings and other reasons made the press think that some discrepancies appeared in the information and comments delivered at the conferences of both organizations. To respond to this issue, joint press conferences participated by NISA, TEPCO and other relevant organizations have been held at the Joint Headquarters of Fukushima NPS Emergency Reponse since April 25 in order to share comprehensive and detailed information related to the current accidents uniformly and consistently and to increase accuracy and transparency. (This headquarters was renamed as the Government - TEPCO Integrated Response Office on May 9.) The joint press conferences have been participated by Special Advisor to Prime Minister Hosono, NISA, TEPCO, NSC Japan and MEXT and other organizations.

Among the opinions received at hotlines and counseling services, they pointed out that the government and the nuclear operator held press conferences separately and their views were different. Similarly, experts suggested that a significant problem is that "One Voice," the principle of emergency publicity, was not thoroughly communicated in the initial stage.

6) When developing the press release materials, graphs and pictures have been used to help non-specialists more easily understand technical and specialized information on reactors and radiation status. Some people calling the counseling services suggested they would welcome materials that are easy-to-understand for laypeople, which means the materials did not meet the needs of diverse types of readers. It would be endless task to pursue ways to make easy-to-understand material to a satisfactory extent, but it is necessary to make continuous efforts.

As it is also applicable to the briefing at press conferences, experts suggested that information on anticipated and future risks and scenarios was mostly missing. Such feedback has been received at the counseling services. However, the government, which is accountable for the accuracy of the statements, usually hesitates to comment on uncertain things about the future except for definite and certain incidents, but it's important to try to provide information publicly required.

The ERC of NISA can be accessed by those related to the press, which followed up some technical issues insufficiently explained by released materials and some points difficult to thoroughly communicated.

As the views of the media side have been expressed through their media, how the news on the accident is reported should be followed. Based on it, we need to increase briefing opportunities to cover the missing parts in the previous briefings or change the way of explanation. Also, they should be reflected in the policy making process to come up with specific actions.

The Nuclear Emergency Response Headquarters (hereinafter referred to as "NERHQs") summarize related information on situation of the accident at Fukushima Dai-ichi NPS and the governmental responses in an integrated fashion as needed from the initial stage of the accident, and provide information extensively and generally on the Cabinet website. Press releases have been posted on respective websites of the Ministry of Economy, Trade and Industry (hereinafter referred to as "METI"), MEXT and NSC Japan and other agencies. The website of METI covers comprehensive information on the Great East Japan Earthquake, for example, allowing people to access monitoring data conducted by agencies of MEXT and local governments.

(3) Inquiries from general public

1) Inquiries on the above-mentioned press releases, etc. from the general public were responded to by NISA staff in charge around the clock since the occurrence of Fukushima NPS accidents. In response to development of nuclear accidents and the occurrence of various incidents regarding radiation safety, the number of staff was increased, supported by the Japan Nuclear Energy Safety Organization (hereinafter referred to as "JNES"), and also the number of telephone lines grew (to 13 lines from 5 during the daytime) on March 17. This service has been sequentially reinforced with the support of JNES. We received a total of 15,000 calls and inquiries between March 17 and May 31. Currently, the number of calls has been decreasing compared with the number received when the service started, but a considerable number of inquiries are still being received.

The comments and feedback on public relations among all the inquiries increased in May from the initial stage of the accident. This might be related with the change in interests

from simple questions and complaints to public relations due to the stabilized progress of the plant incidents, but the verification will be implemented later on.

The percentage of publicity-related feedback among the total inquiries has been small. This might be explained that there have been more simple questions and complaints because the press releases and conferences were involved with progress of incidents at NPS are not well understood and related to daily life and, once an accident occurs, such events became closely related to daily life.

Figure IX-1-1 Number of inquiries to NISA's counseling service

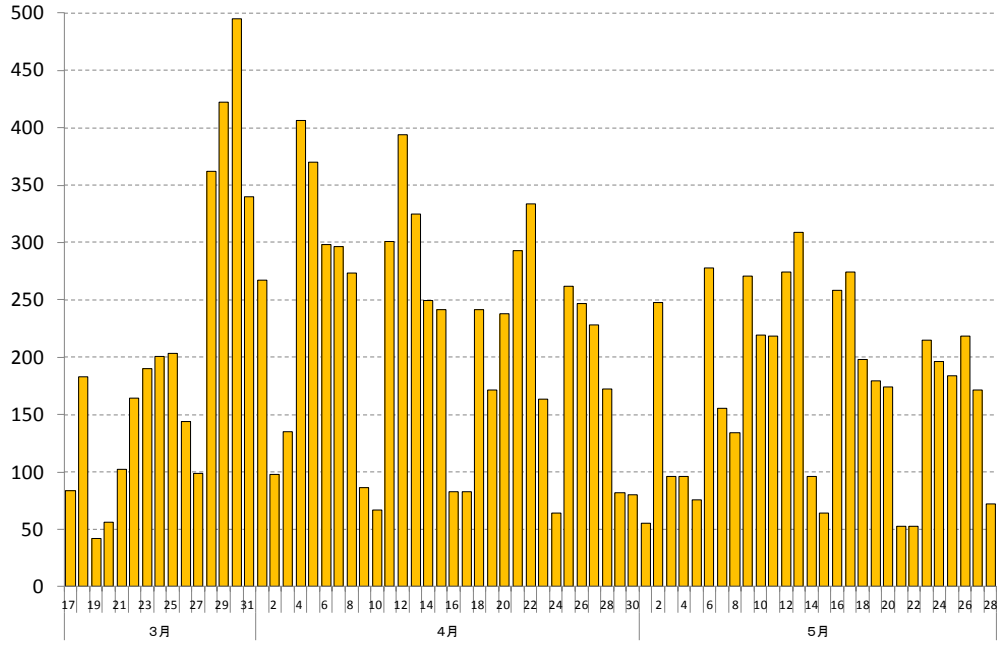


(Period: March 17 to May 31)

2) On March 17, MEXT cooperated with the Japan Atomic Energy Agency (hereinafter referred to as "JAEA") to open a health counseling hotline to provide health counseling and propagat correct information. It has received a total of 17,500 calls as of May 18. The National Institute of Radiological Sciences (hereinafter referred to as "NIRS") has opened a hotline to provide medical information on radiation exposure and health counseling to the general public, which had received a total of 7,800 calls as of May 18.

3) The parties concerned to academies such as the Atomic Energy Society of Japan also

provide explanation and information with the public actively.

4) The Fukushima Prefectural Government supported by the national government opened counseling service on radiation in the Fukushima Prefectural Office. More than 14,000 inquiries have been received there since the opening.

(4) Public relations activities of the Local Nuclear Emergency Response Headquarters

The residents around NPS including evacuees are the most important subject for communication.

Regarding public relations of the Local Nuclear Emergency Response Headquarters (hereinafter referred to as the "Local NERHQs" ), considering the criticality of the incidents, press conferences by spokespeople of the Local NERHQs have been held and materials released. Some of the handout materials have been independently developed by the Local NERHQs.

As different radiation protection measures should be taken depending on suffering areas, and also because many of those live in shelters, they need more detailed information on radiation safety as well as daily life, etc. Also, it's necessary to note the situation that in many disaster areas the media such as television and the Internet are not available. To respond to their needs, since March 29, the Local NERHQs published a newsletter and distribute to each evacuation site, and since April such information has been periodically broadcasted through local radio stations (Five editions of newsletters and 62 radio broadcasting as of May 10).

Materials regarding instructions under the name of the Director-General of Nuclear Emergency Response Headquarters, press releases on monitoring data of MEXT, monitoring data by geographic area and materials on support measures for local business corporations are provided to local municipalities depending on their need. Such information is immediately released to the local media through press conferences, etc.

(5) Publicity to local residents on evacuation zones

In the initial stage of the accident occurrence, the Director-General of Nuclear Emergency Response Headquarters determined evacuation areas and instructed evacuation in order to ensure the safety of the residents and other citizens as soon as possible.

After such instructions were issued, the secretariat of NERHQs called the Local NERHQs and Fukushima Prefecture to deliver evacuation instructions and stay indoors instructions. Relevant municipalities received calls on such instructions through the Local NERHQs and Fukushima Prefecture. Additionally, the NERHQs directly called those municipalities. However, since communication services including telephone lines were heavily damaged by the massive earthquake, not all the direct calls reached the affected municipalities. Prior notification to local governments was not satisfactorily delivered because some municipalities did not receive evacuation instruction either directly or indirectly.

The police transmitted direction to evacuate to the local governments through police radio. In order to promptly publicize evacuation instructions right after they were issued, the Chief Cabinet Secretary has announced the details of each instruction at press conferences as well as using television and radio to spread out the information.

2. Communication with international community

(1) Communication with international organizations such as the IAEA

The accident at the nuclear power plant is a concern of the entire global community. The Japanese government made every effort to provide information promptly and accurately to the IAEA, the most important international organization dealing with nuclear safety issues. Since 16:45 on March 11 (Japan time; the same shall apply hereinafter), two hours after 14:46 when the earthquake occurred, pursuant to the Convention on Early Notification of a Nuclear Accident, NISA has notified the IAEA periodically on incidents occurred and how Japan is coping with them as much as possible. As of May 31, a total of some hundreds reports including press release, plant parameter and monitoring results were sent to the IAEA and approximately 100 individual inquiries from the IAEA were answered. Information was also provided from the Japanese Government through diplomatic channels of the Permanent Mission of Japan to the International Organizations in Vienna shared information with the IAEA pursuant to the same Convention as needed. The IAEA has provided information to the press and the general public based on the gathered information.

The Japanese government has provided information to the World Health Organization (hereinafter referred to as “WHO”) pursuant to the International Health Regulations (hereinafter referred to as “IHR”) when needed.

In addition, at various international conferences held after the accident occurred, officials and staff related to the Japanese Government explained the status of the accident and how Japan has coped with it and answered questions from the participants. (Please refer to Attachment IX-1 for dates, names and overviews of briefings, etc. at international conferences.) Responding to import restrictions of exported goods from Japan, we have requested the international community to take action based on a scientific basis.

(2) Communication with governments of other countries

The Japanese Government has highly emphasized information provision to countries and areas around the world including neighboring countries and regions. Hence, after the occurrence of the accident, 46 briefings to diplomats in Tokyo as of May 11 were held daily from March 13 to May 18, 3 days a week from May 19 onward in principle. (Please refer to Attachment IX-2 for the list of briefing dates, speakers, and contents.) In addition, simultaneous emergency notices were released as needed (Refer to Attachment IX-3 for the dates and contents of emergency notices) and individual communication on such emergency notices was made with neighboring and other countries in principle from April 6 onward. The Japanese Government has explained against the imposition of import restrictions of export goods from Japan to diplomats in Tokyo and to governments of other countries through the diplomatic missions in their countries assigned and requested them to take actions based on scientific basis.

(3) Communication with foreign media and citizens whose mother language is not Japanese

From March 13 onward, joint press conferences by relevant ministries and agencies for foreign media on the accident status and actions taken by the Japanese government (Refer to Attachment IX-4 for dates, places, speakers and contents of the press conference. Japanese-English simultaneous interpreters have been introduced to the press conferences of the Chief Cabinet Secretary in addition to those of Prime Minister. Videos of press conferences have been posted on websites of Japanese Government Internet TV and the Foreign Press Center Japan.), interviews with ministers and officials with foreign media (Refer to Atatchment IX-5 for dates, interviewees, and media name of the interviews), the contribution to major foreign media by the Prime Minister and the Foreign Minister (Refer to Attachment IX-6 for the posted article) were conducted. When apparent factual errors and fear-mongering were identified in earthquake-related coverage by foreign media, the Japanese Government has promptly addressed them and encouraged such media to place the counterarguments of Japan.

On March 12 onward, websites of the Japanese governmental organizations posted relevant information in English, Chinese and Korean. (Refer to Attachment IX-7 for the list of posted dates and contents.)

In addition, the Prime Minister of Japan and His Cabinet created Twitter and Facebook accounts under the name of Kantei to send summaries of the press conferences of the Prime Minister and Chief Cabinet Secretary to a wide range of audience as needed.

Along with information provision from the diplomatic missions of Japan to their countries assigned as needed, the diplomatic missions posted related information on websites of the diplomatic offices in a total of 29 different languages. (Refer to Attachment IX-8 for the list of diplomatic offices, dates and contents of the postings) This websites are accessible to everyone through the Internet.

Japan has held briefings to businesses of overseas both in Japan and overseas.

3. Provisional evaluations based on rating of International Nuclear Events Scale (INES)

Japan has used INES since August 1992. When any trouble occurs at any nuclear power plant, NISA issues provisional evaluation and investigated the cause, and after the reoccurrence preventive measures is established, the Nuclear and Industrial Safety Subcommittee of the Advisory Committee for Natural Resources and Energy of METI validates them from a technical point of view and then formally evaluates them.
Based on the development of the accident at Fukushima Dai-ichi NPS, provisional evaluation was updated in reports from 1st to 4th. (Please refer to the Appendix IX-9 for details of provisional evaluation)

1) The first report

A provisional evaluation of Level 3 was issued based on the fact that the emergency core cooling system for water injection became unusable at 16:36 on March 11, because motor operated pumps were disabled due to total power loss at Unit 1 and Unit 2 of Fukushima Dai-ichi NPS.

2) The second report

On March 12, an explosion of the vent of reactor containment and reactor building of Unit 1 of Fukushima Dai-ichi NPS occurred. Based on environmental monitoring, NISA confirmed the emission of radioactive iodine, cesium and other radioactive materials, and a provisional evaluation of Level 4 was announced because we suspected the emission of over 0.1 % of radioactive materials from fuel assemblies in the reactor core inventory. As the incidents have not been restored, "People and the environment" in the INES User's Manual Edition 2008 is to be evaluated.

3) The third report

On March 18, as some incidents to cause fuel damage were identified at Unit 2 and Unit 3 of Fukushima Dai-ichi NPS as well as judging from all the information obtained at the moment including the status of Unit 1, NISA announced the provisional evaluation Level 5 because we suspected the release of several percent of the core inventory.

The cooling and water supply system of spent fuel pit did not work in Unit 4. Due to explosion and damage to the reactor building, we suspected no safety equipment remains in it and we announced provisional evaluation of Level 3 because.

4) The fourth report

On April 12, regarding the estimated amount of radioactive materials released in the atmosphere from the reactors of Fukushima Dai-ichi NPS, NISA announced the estimate at 370,000 TBq of radioactivity in iodine equivalent from analytical results of the reactor status and others by JNES. The NSC also estimated the total amount of radioactive materials released in the atmosphere from Fukushima Dai-ichi NPS based on the monitoring results by the same day. Based on these results, NISA announced provisional evaluation of Level 7 on the entire site of Fukushima Dai-ichi NPS, on the same day.

4. Evaluation on communication regarding the accident

(1) How information should be provided to residents in vicinity and general public in Japan and international community

1) The main channel of information provision has been through the mass media, which has transmitted press conferences and press releases to residents in the surrounding area,

general public in Japan and international community. Hence, it is important to identify the needs of the mass media in addition to adequately communicate what people want to know. For example, when a hydrogen explosion occurred at reactor building of Units 1 and 3, television broadcast it almost real-time. The mass media strongly requested the ERC right after the explosion for an explanation of the accident by someone with appropriate knowledge in front of the camera about what really happened there and how the explosions would affect the reactors and so on. However, because it took time to verify the related facts, their needs were not always satisfied. As this issue is liable to be involved with trade-off between swiftness and accuracy, it would have been appropriate to develop a manual to respond to such situations in advance.

2) As mentioned above, it is true that the Japanese government made all kinds of efforts to help non-specialists understand technical and detail information in developing materials for press releases. However, visually-effective materials were not always developed at time-pressing occasions such as immediately after new facts were identified.

From the perspective of encouraging residents in the surrounding area, general public and international community to understand the situations, it would be effective to use information technology and graphs, pictures and other visual support both in Japanese and other languages which are prepared regularly in advance.

3) As mentioned above, communication and prior notification to local municipalities as well as industry organizations about outflow of water with high-level radioactivity and discharge of stagnant water with low-level radioactivity to the sea by TEPCO were delayed. Above all, communication and notification to such organizations are required to be conducted in a timely manner and thoroughly by taking every possible measure.

4) Japan has been making efforts to share information with the international community promptly and accurately, but it will be adequate to further promote approaches for information provision to the international community keeping pace with information provision in Japan, and so it is desirable to consider utilizing simultaneous interpretation at press conferences. Moreover, as this accident received remarkable attention from overseas, news reports different from the fact were sometimes made by foreign news media who do not have accurate knowledge about general information on Japan or actual condition about the accident. Therefore it’s desirable to actively provide opportunities that foreign new media learn our actual conditions more widely and adequately.

(2) What information provision in power outage should be

While monitoring data has been quickly publicized, we need to come up with some ways to promptly communicate necessary information to the sufferers who want to obtain information but do not have access to the Internet due to power failure in such a case as combined emergency with natural disaster.

(3) Importance of communication closely with neighboring counties and areas

1) Although the Japanese Government has made every effort to share information promptly and accurately, looking at some individual cases, initially information was not always fully shared in advance especially with neighboring countries and regions. Although communication was not intentionally delayed, the Japanese Government could not identify part of actual status of the accident after it occurred; as a result information was not always provided in a timely manner.

   For instance, TEPCO discharged stagnant water with low-level radioactivity to the sea in order to prevent water with higher-level radioactivity from outflowing to the sea on April 4. NISA notified the IAEA of the discharge in advance. However, since the development of the situation was very urgent and information was not fully shared among the relevant government authorities, this urgent measure was taken before the neighboring countries and regions were fully notified through diplomatic channels.

   The Japanese government sincerely regrets that we had to discharge stagnant water, even though with low-level radioactivity, to the sea, and recognized that much needs to be improved regarding the communication with neighboring countries on this discharge. Therefore, we reviewed the communication channels in the governmental organizations and explained to individual countries and areas about the background of the discharge, the relevant data and other information. Also, we identified a contact point where the Japanese government can maintain around-the-clock communication with the neighboring countries and regions. Subsequently, prior notification on specific areas of interest for the neighboring countries and regions such as shift of INES level, establishment of restricted zone, evaluation of contaminated water and opening of the airlock (Please refer to the above 2. (2)).

(4) What accident notification should be

1) The Japanese government, as mentioned in the above 2, has continuously provided necessary information on the status of nuclear reactor facilities in Japan pursuant to the Convention on Early Notification of a Nuclear Accident. The Japanese government recognizes that maximum level of information required by the Convention has been provided to IAEA and all the relevant countries through IAEA since the occurrence of the accident.

2) Generally speaking, it would not be always easy to determine whether the current accident is applicable to "the event of any accident from which a release of radioactive material occurs or is likely to occur and which has resulted or may result in an international transboundary release that could be of radiological safety significance for another State" as stipulated in the Convention on Early Notification of a Nuclear Accident immediately after occurrence of a nuclear accident. It would be more difficult especially for a country like Japan surrounded by the sea on all sides. The Japanese government considers that, for the purpose of ensuring smooth and steady international communication when nuclear accident occurs, it is adequate to discuss establishment of an international process for notification to the IAEA, whenever a certain level of accident occurs, regardless of resulting in an international transboundary release of not.

(5) Import restriction of export goods, etc. from Japan

The Japanese government understands the global concerns about the possibility of impact on exported goods from Japan by radioactive materials released by the current accident. However, the Japanese government considers it is important to use scientific data when taking any action toward this issue. It cannot be denied that such cases, where information was not fully provided, have led to unduly concerns in the international community.

From these perspectives, we have continuously held briefings to diplomats in Tokyo, shared information and explanation with relevant governments and international organizations and explained to the countries, etc. which are taking such measures because the Japanese government considers necessity of such measures are to be reexamined on scientific grounds. Some of those countries etc. have eased such restrictions.

X. Further efforts to settle the accident in the future

1. The current status of reactors etc. of Fukushima Dai-ichi NPS

In reactors of Fukushima Dai-ichi NPS in Units 1, 2 and 3, fresh water has been supplied to RPV through a feed-water system and have been continuously cooled the fuel in RPV. This helped the temperature around the RPV stay at 100 to 120 degrees Celsius at the lower part of the RPV. Due to the concern over the increase of the accumulated water, review and preparation for circulation cooling system including the process of draining accumulated water has been underway. Although the RPV and the PCV of Unit 1 has been pressurized to some extent, steam found in some units such as Units 2 and 3 seems to be caused by leakage from the RPV and the PCV, which is condensed to accumulations of water found in many places including reactor buildings and some steam has been released to the atmosphere. To respond to this issue, the status has been checked by dust sampling etc. in the upper part of the reactor buildings and discussion and preparation for covering the reactor buildings has been underway.

Cold shutdown of Units 5 and 6 has been maintained using residual heat removal systems with temporary seawater pumps and their reactor pressure has been stable in between 0.01 ~ 0.02 MPa.

Status of Each Unit of Fukushima Dai-ichi NPS(As of May 31st)

| Unit No. | Unit 1 | Unit 2 | Unit 3 | Unit 5 | Unit 6 |
|---|---|---|---|---|---|
| Situation of water injection to reactor | Injecting fresh water via the Water Supply Line.<br>Flow rate of injected water : 6.0 $m^3$/h | Injecting fresh water via the Fire Extinguish and Water Supply Line.<br>Flow rate of injected water: 7.0$m^3$/h(via the Fire Protection Line), 5.0$m^3$/h(via the Feedwater Line) | Injecting fresh water via the Water Supply Line.<br>Flow rate of injected water : 13.5 $m^3$/h | Water injection is unnecessary as cooling function of the reactor cores are in normal operation. | |
| Reactor water level | Fuel range A : Off scale<br>Fuel range B : -1,600mm | Fuel range A : -1,500mm<br>Fuel range B : -2,150mm | Fuel range A:-1,850mm<br>Fuel range B:-1,950mm | Shutdown range measurem ent 2,164mm | Shutdown range measure ment 1,904mm |
| Reactor pressure | 0.555MPa g(A)<br>1.508MPa g(B) | -0.011MPa g (A)<br>-0.016MPa g (B) | -0.132MPa g (A)<br>-0.108MPa g (B) | 0.023 MPa g | 0.010 MPa g |

| Unit No. | Unit 1 | Unit 2 | Unit 3 | Unit 5 | Unit 6 |
|---|---|---|---|---|---|
| Reactor water temperat-ure | (Collection impossible due to low system flow rate) | | | 83.0℃ | 24.6℃ |
| Tempera-ture related to Reactor Pressure Vessel (RPV) | Feedwater nozzle temperature: 114.1℃ Temperature at the bottom head of RPV: 96.8℃ | Feedwater nozzle temperature: 111.5℃ Temperature at the bottom head of RPV: 110.6℃ | Feedwater nozzle temperature: 120.9℃ Temperature at the bottom head of RPV: 123.2℃ | (Monitoring water temperature in the reactor.) | |
| D/W Pressure, S/C Pressur | D/W: 0.1317 MPa abs S/C: 0.100 MPa abs | D/W: 0.030 MPa abs S/C: Off scale | D/W: 0.0999 MPa abs S/C: 0.1855 MPa abs | - | |
| Status | We are working on ensuring the reliability of cooling function by installing temporary emergency diesel generators and sea water pumps as well as receiving electricity from the external power supplies in each plant. | | | | |

2. Response to the “Roadmap towards restoration from the accident by the nuclear operator”

(1) Announcement of “Roadmap towards restoration from the accident” (April 17, 2011)

An accident releasing radioactive materials outside the plant occurred at Fukushima Dai-ichi Nuclear Power Station (NPS) as a result of the Great East Japan Earthquake which occurred off the Pacific coast of the Tohoku region of Japan on March 11.

Since then, Fukushima Dai-ichi NPS has made every effort to cool each plant from Unit 1 to Unit 4, to achieve the cold shutdown and to swiftly mitigate the release of radioactive materials from the plant to the surrounding environment.

The residents in the municipality where the NPS is located and those in the surrounding municipalities, were forced to evacuate or stay indoors, etc., due to the release of radioactive materials.

The issue with the highest priority under this condition was to achieve cold shutdown quickly and to enable evacuees to return to their homes. Although TEPCO announced the status of the plants at each occasion from the occurrence of the accident on March 11, the company considered that there was a need to make public what are the challenges to be tackled, targets to be achieved and measures to be taken in the future.

Furthermore, Prime Minister Kan instructed TEPCO on April 12 to present a future plan for restoration from the accident.

In response to the instruction, TEPCO announced on April 17 the “Roadmap towards restoration from the accident,” which was drafted by the government and TEPCO under the Response Headquarters for the Accident in Fukushima NPS.

1) Basic policy

By bringing the reactors and spent fuel pools to a stable cooling condition and mitigating the release of radioactive materials, we will make every effort to enable evacuees to return to their homes and for all citizens to be able to secure a sound life.

2) Targets

Based on the basic policy, the following two steps have been set as targets:

Step 1: “Radiation dose in steady decilne”

Step 2: Release of radioactive materials is under control and radiation does is being significantly exposure.

Note: Issues after Step 2 will be categorized as “Mid-term issues“.

| Areas | Issues | Targets and Countermeasures | |
|---|---|---|---|
| | | Step 1 | Step 2 |
| Ⅰ. Cooling | (1) Cooling the Reactors | ① Maintain stable cooling<br>・Nitrogen gas injection<br>・Flooding up to top of active fuel.<br>・Examination and implementation of heat exchange function.<br>② (Unit 2) Cool the reactor while controlling the increase of accumulated water until the PCV is sealed | ③ Achieve cold shutdown condition (sufficient cooling is achieved depending on the status of each unit.)<br>・Maintain and reinforce various countermeasures in Step 1. |
| | (2) Cooling the Spent Fuel Pools | ④ Maintain stable cooling<br>・Enhance reliability of water injection.<br>・Restore coolant circulation system.<br>・(Unit 4) Install supporting structure. | ⑤ Maintain more stable cooling function by keeping a certain level of water<br>・Remote control of coolant injection.<br>・Examination and implementation of heat exchange function. |
| Ⅱx Mitigation | (3) Containment, Storage, Processing, and Reuse of Wafer Contaminated by Radioactive Materials (Accumulated Water) | ⑥ Secure sufficient storage place to prevent water with high radiation level from being released out of the site boundary<br>・Installation of storage/ processing facilities.<br>⑦ Store and process wafer with low radiation level<br>・Installation of storage facilities/ decontamination processing. | ⑧ Decrease the total amount of contaminated wafer<br>・Expansion of storage/processing facilities.<br>・Decontamination/ Desalt processing(reuse), etc. |

<table>
<tr><td></td><td>(4) Mitigation of Release of Radioactive Materials to Atmosphere and from Soil</td><td>⑨ Prevent scattering of radioactive materials on buildings and ground</td><td>⑩ Cover the entire buildings (as temporary measure)</td></tr>
<tr><td></td><td></td><td colspan="2">• Dispersion of inhibitor<br>• Removal of debris<br>• Installing reactor building cover</td></tr>
<tr><td rowspan="2">Ⅲn Monitoring/Decontamination</td><td rowspan="2">(5) Measurement, Reduction and Announcement of Radiation Dose in Evacuation Order/ Planned Evacuation/ Emergency Evacuation Preparation Areas</td><td>⑪ Expand/enhance monitoring and inform of results fast and accurately<br>・Examination and implementation of monitoring methods.</td><td>⑫ Sufficiently reduce radiation dose in evacuation order/ planned evacuation/ emergency evacuation preparation areas<br>・Decontamination/ monitoring of homecoming residences.</td></tr>
<tr><td colspan="2">(Note) With regard to radiation dose monitoring and reduction measures in evacuation order/ planned evacuation/ emergency evacuation preparation areas, we will take every measure through thorough coordination with the national government and by consultation with the prefectural and municipal governments.</td></tr>
</table>

Table X2-1 Immediate Actions for the Roadmap

Timeline for achieving targets is set, in spite of various uncertainties and risks, as follows:

Step 1: Approximately 3 months

Step 2: Approximately 3 to 6 months (after completing Step 1)

Note: As soon as each step is achieved and quantitative forecasts are made, they will be publicized. When the original targets and their timeline for achievement must be revised, they will also be announced in due course.

3) Immediate Actions

In order to achieve the above targets, immediate actions were divided into three groups, namely, “I. Cooling”, “II. Mitigation”, “III. Monitoring and Decontamination.” Furthermore, targets were set for each of the following five issues and various measures will be implemented simultaneously— “Cooling the Reactors,” “Cooling the Spent Fuel Pools,” “Containment, Storage, Processing, and Reuse of Water Contaminated by Radioactive Materials (Accumulated Water) ”, “Mitigation of Release of Radioactive Materials to Atmosphere and from Soil,” and “Measurement, Reduction and Announcement of Radiation Doses in Evacuation Order/Planned Evacuation/ Emergency Evacuation Preparation Areas.” (Please refer to the chart )

(2) Announcement of the status of progress regarding “Roadmap towards restoration from the accident” (May 17), on May 17, one month after the announcement of the “Roadmap towards restoration from the accident”, TEPCO announced its progress status.

1) Basic policy and targets

No change from the previous announcement.

2) General overview on the progress made in the past month and further actions

Major changes from the previous announcement are indicated below:

a. Added areas and issues

The previous roadmap set three areas (“Cooling,” “Mitigation,” and “Monitoring and Decontamination”) as well as five issues (“Cooling the Reactors,” “Cooling the Spent Fuel Pools,” “Containment, Storage, Processing, and Reuse of Water Contaminated by Radioactive Materials (Accumulated Water),” “Mitigation of Release of Radioactive Materials to Atmosphere and from Soil,” and “Measurement, Reduction and Announcement of Radiation Doses in Evacuation Order/Planned Evacuation/ Emergency Evacuation Preparation Areas,”) .

Reflecting progress made in the past month, two areas (“Countermeasures against aftershocks” and “Environment improvement”) and three issues (“Groundwater ,” “Tsunami, reinforcements, etc.” and “Life/work Environment”) were newly added to the list, resulting in 5 areas and 8 issues.

Accordingly, the number of countermeasures relating to the recovery efforts has increased to 76 from 63.

b. Issue (1) Cooling of reactors: <Revision of prioritized countermeasures due to coolant leakage>

Workers entered the reactor building in Unit 1 after improving work environment, i.e. removing rubble and mitigating radiation exposure, calibrated instrumentation (reactor water level, etc.) and confirmed reactor building status.

As a result, they found that the coolant leakage from primary containment vessel (PCV) occurred in Unit 1 as well as in Unit 2, which suggests Unit 3 may have had the same risk.

Hence, flooding operations to fill PCV with water to cover the exposed fuel rods were postponed and due consideration was given to leakage sealing.

Accordingly, as a major countermeasure to achieve "cold shutdown" in Step 2, revision was made prioritize the establishment of "circulating injection cooling," where contaminated water accumulated in buildings and other places is reused to be injected into the PCV after being processed.

c. Issue (2) Cooling of spent fuel pool (SFP): <Implementation ahead of schedule>

Progress has been made in a relatively smooth manner. A measure to reduce radiation dose, remote controlled operation of concrete pump trucks called "Giraffe" and others to inject water into the fuel pools of Units 1, 3 and 4, etc were implemented ahead of schedule Installation of heat exchanger in SFP scheduled in Step 2 is expected to be implemented in Step1.

d. Issue (3). Containment, Storage, Processing, and Reuse of accumulated water

< Accumulated water increases until operation of processing facilities is commenced>

Accumulated water increased as new water was found in reactor building of Unit 1. While additional storage for accumulated water was secured as a tentative measure, starting the operation of processing facilities and the prompt establishment of "circulating injection cooling" became important in controlling accumulated water.

In parallel, countermeasures to prevent contamination spreading into the sea was reinforced. A silt fence was installed in the port, and progress was also being made on the initial construction necessary to install a circulating decontamination system in the port.

Furthermore, mitigation of groundwater contamination was set as a new issue.

New measures such as “Sub-drain management” and “shielding method of underground water were added.”

e. Issue (7) Aftershocks and Tsunami <Countermeasures are reinforced.>

Potential aftershocks and tsunami were explicitly designated issues.

“The instllation of temporary tide barriers” was set as a countermeasure for the roadmap, in addition to “adding redundancy of power source,” “transfer of emergency power source to up ground,” and “adding redundancy of water injection line.

Furthermore, in addition to SFP of Unit 4, reinforcement of each unit was under consideration.

f. Issue (8) Life/Work environment <Progress is being made step by step>

Reflecting the fact that improvement of Life/Work environment of workers in summer season has been initiated, new areas and issues were added.

Furthermore, necessary measures will be taken in addition to previously implemented “improvement of meal,” “maintenance” of accommodation,” and “installation of rest station,” which have already been implemented, progress has been made on necessary additional measures such as “installation of temporary dormitories,” and “additional installation of onsite rest facilities/restoration of current facilities.”

2. Measures taken by the Japanese Government

When “Roadmap towards restoration from the accident” by TEPCO was announced on April 17, the Japanese Government announced the statement by the Minister of METI, including the following views:.

1) The Government will request TEPCO to ensure the implementation of this roadmap steadily and as early as possible. To this end, the Nuclear and Industrial Safety Agency and other bodies will undertake regular follow-up, monitoring of the progress of the work, and necessary safety checks;

2) The Government will request TEPCO to ensure the mobilization and deployment of workers, the procurement and preparation of equipment and materials, and the arrangement of accommodation and other facilities, which are necessary to ensure the implementation of the roadmap;

3) At the end of Step 2, the release of radioactive materials is expected to be under control. At this stage, the Government will, following the advice of the Nuclear Safety Commission of Japan, review promptly the planned evacuation areas and emergency evacuation preparation areas. By the time of reviewing, criteria on which to base a judgment for those evacuation areas will be considered and decontamination will be carried out in these areas as wide as possible.

By implementing these countermeasures, the Japanese Government would like to inform the residents of some of the areas within a target of 6 to 9 months, whether they will be able to return to their homes.

Additionally, based on progress made for this period, on May 17, future actions to be taken by the Japanese Government were announced as follows:

(1) Support to nuclear operator and confirmation of safety

1) The government requests TEPCO to ensure the steady implementation of the roadmap as early as possible, the undertaking of regular follow-up, monitoring of the progress of the work, and necessary safety checks.

2) The government will conduct the collection of reports on the necessary measures taken by TEPCO pursuant to the provisions of Article 67 of the Act on the Regulation of Nuclear Source Materials, Nuclear Fuel Materials and Reactors, and subsequently evaluate and confirm its necessity, safety, environmental impact, etc.

(2) Support until lifting of the evacuation order

1) In order to identify precisely the needs of suffering local governments and residents, support will be provided by dispatching national government employees, and the environment which maintains communication among the relevant organizations and individuals will be improved.

2) In order to ensure the security and safety of the residents and public security in the area, the best possible efforts will be made to enforce security in the evacuation area.

(3) Support until lifting of deliberate evacuation order

1) A on-site government response office will be established to precisely identify the needs of suffered local governments and residents while the both relevant local and national governments will work closely together to smoothly provide various supports for sufferers to implement "stay in-doors" and evacuation in an emergency. Moreover, the ability to maintain communication among relevant organizations and individuals will be improved.

2) Municipal offices, prefectural and the national governments will work closely together. Moreover, the ability which maintains communication among relevant organizations and individuals will be improved.

3) Safety and security of residents will be ensured in the area by working with relevant local governments.

(4) Support until lifting of evacuation-prepared area in case of emergency

1) Both local and national governments will work closely together to implement "stay indoor" and evacuation in emergency. Moreover, the ability to maintain communication among relevant organizations and individuals will be improved.

2) Taking every possible measure to prevent crime within such areas.

(5) Ensuring safety and security of suffering residents

1) Sustainment of local community

When prefectural governments and municipalities guide the evacuees to move from primary shelters to secondary shelters and temporary housing, necessary support will be provided, while considering sustainment of the local community.

2) Ensuring healthcare, nursing and other care, and response to health concerns

a. Based upon the actual situation of each evacuation area, those who need nursing care or have disabilities or other problems will definitely be taken care of by working with relevant local governments.

b. In order to allay health concerns of the residents, screening and decontamination of the residents will definitely be implemented. A health counseling hotline was opened and on-site health counseling, and mental care is provided to ensure that residents' health is properly managed.

c. The National Institute of Radiological Science will cooperate with the relevant organizations and individuals in their efforts related to evaluating radiation exposure of the residents.

3) Educational support

a. As nursery schools, kindergartens, primary/secondary/high schools in the evacuation areas, deliberate areas, evacuation areas and evacuation prepared areas are currently closed, every measure will be taken to ensure educational opportunities for those children will be provided in and around their shelters and other places.

b. How to handle the soil and such at educational facilities in Fukushima prefecture will be promptly addressed based on the results of environmental monitoring.

4) Reinforcement of environmental monitoring (Plan for Reinforcing Environmental Monitoring)

a. Comprehensive radiation monitoring of the status of radioactive materials released from TEPCO Fukushima Dai-ichi NPS will be implemented with close cooperation with relevant organizations including Department of Energy of the United States based on "Plan for Reinforcing Environmental Monitoring."

b. Furthermore, "Radiation Exposure Distribution Maps" and such were developed and publicized, and radiation exposure is measured mainly in the deliberate evacuation areas to identify a comprehensive view of the accident status and to utilize the data for lifting of the evacuation order for the deliberate evacuation areas etc.

c. In conjunction with conducting environmental monitoring of farms and educational and other facilities, the sites for analyzing radioactive concentration of food products

mainly in Fukushima and samples of environmental monitoring will be improved.

5) How to handle rubble and sewage sludge

Regarding how to deal with rubble and sludge from sewage treatment, in addition to conducting onsite investigation, the criteria and disposal methods of the disaster waste possibly contaminated with radioactive materials will be promptly addressed based on monitoring and other results.

6) Enhancement of publicity to nuclear sufferers

a. Press conferences have been held daily in order to provide citizens accurately and promptly with information regarding the accident.

b. In order to ensure that necessary, easily understood information is communicated to evacuees, a public-service program is broadcasted through local radio stations, while newsletters have been published and posted in shelters and other places.

c. Furthermore, the Internet and nationwide radio broadcasting will be used to provide information for residents evacuated to other prefectures.

## XI. Response at other NPSs

### 1. Emergency safety measures at other NPSs in light of the accident at Fukushima Dai-ichi and Fukushima Dai-ni NPSs

Although the frequency of the occurrence of an extremely large tsunami caused by massive earthquake is deemed to be substantially small, the impact of such a tsunami on NPSs may be extensive. Hence, based on our newfound knowledge, we have decided to take emergency safety measures first to minimize as much as possible the release of radioactive materials as well as to restore cooling functions at all NPSs, other than Fukushima Dai-ichi and Fukushima Dai-ni NPSs. We have decided to prevent the occurrence of reactor core damage, etc. due to loss of all AC power, etc. and the occurrence of a nuclear emergency because of such damage, by ensuring that nuclear operators and other organizations are appropriately committed to implementing emergency safety measures and that the Nuclear and Industrial Safety Agency (NISA) confirms such measures through inspections, etc.

NISA is committed to improve the reliability of emergency safety measures continuously by ensuring that the such measures are appropriately taken through conducting inspections and other measures, encouraging nuclear operators to undertake necessary improvements, and incorporating newfound knowledge in the future, etc.

#### (1) Details of emergency safety measures

The following issues, which were caused by the massive tsunami accompanying the earthquake, seem to be the direct causes for expansion of the Fukushima Dai-ichi NPS accident, the occurrence of the nuclear emergency and the expansion of the scale of the emergency:

1) The loss of the external power supply as well as the inability to secure emergency power supply.

2) The loss of the function of the seawater system to finally discharge to the sea the heat of the reactor cores after the shutdown of the reactors.

3) The inability to flexibly supply cooling water when water for cooling the spent fuel pool and usual on-site water supply into the pool stopped.

On March 30, 2011, NISA amended its ministerial ordinance (Requirements of Safety Regulations) and took other measures, to request all nuclear power stations (other than Fukushima Dai-ichi and Dai-ni NPSs) to enhance their safety measures as follows. The implementation status of these measures (including future plans) were requested to be submitted to NISA within about one month (by the end of April 2011).

a. Regulatory requirements

Even if all three major functions (all AC power supply, seawater cooling function and spent fuel pool cooling function) are lost due to a tsunami, damage to the reactor core and the spent fuels should be prevented and cooling functions should be restored along with controlling the release of radioactive materials.

b. Specific requirements

(a) Implementation of emergency checking

Emergency checking of equipment and facilities to be used for tsunami-related emergencies should be implemented.

(b) Checking of emergency response plans and implementation of training

Checking of emergency response plans and training assuming that all AC power supply, the seawater cooling function and the spent fuel pool cooling function are lost should be implemented.

(c) Securing emergency power supply

When the on-site power supply is lost and the emergency power supply is not available, an alternative power supply should be secured to flexibly provide the necessary power.

(d) Securing final heat removal functions in an emergency

Preparation for measures to flexibly restore heat removal functions under the assumption, that the seawater system and/or its functions were lost should be implemented.

(e) Ensuring the cooling of the spent fuel pool in an emergency

Measures to flexibly supply cooling water should be implemented when cooling the

spent fuel pool as well as usual on-site water supply into the pool stopped.

(f) Implementation of immediately necessary measures based on the structure, etc. of each site.

(2) Confirmation, etc. by NISA

On May 6, 2011, NISA confirmed by on-site inspection, etc., that emergency safety measures have been appropriately implemented, except at Onagawa NPS, Fukushima Dai-ichi NPS and Dai-ni NPS.

On May 18, 2011, NISA received an implementation status report from Onagawa NPS, where work for taking measures against tsunami was delayed after suffering from the tsunami.

On April 21, 2011, implementation of emergency safety measures was directed to Fukushima Dai-ni NPS because it reached a stable status after cold shutdown. On May 20, 2011, NISA received a report on this implementation status. On-site Nuclear Safety Inspectors from NISA check whether supplies and equipment for emergency safety measures are deployed and such training is implemented. In future, the inspectors will review the appropriateness and effectiveness, etc. of the content of the report and will strictly implement on-site inspections and review how supplies and equipment are deployed as well as how the implementation manual is developed.

2. Shutdown of Hamaoka NPS

In the light of the accident at Fukushima Dai-ichi NPS, NISA directed on March 30, 2011, Cubu Electric Power Co., Inc. (Chubu Electric Power) and other electricity utilities, etc. to immediately work on emergency safety measures that would prevent reactor core damage etc., even if all three functions (all AC power supply, seawater cooling function and spent fuel pool cooling function) are lost due to a tsunami, and to promptly report the implementation status of these measures.

Following these instructions, Chubu Electric Power improved its operational safety programs and documented its procedure manual at Hamaoka NPS, installed the necessary equipment there and even adjusted its measures through drills. NISA performed an on-site inspection to

ascertain that these measures have been implemented appropriately and, as a result, evaluated on May 6 that appropriate measures are in place.

However, Hamaoka NPS is located close to the source area of the anticipated Tokai Earthquake, which is considered to be an extremely imminent danger as indicated by the evaluations of the Headquarters for Earthquake Research Promotion of the Ministry of Education, Culture, Sports, Science and Technology (MEXT), which anticipates an 87 percent probability of a magnitude 8-level earthquake occurring in the region within 30 years. Given the high possibility of Hamaoka NPS being hit by a major tsunami following this earthquake, NISA has requested Chubu Electric Power to surely put the plans stated in its report into practice, taking protective measures against tsunami, securing reserve seawater pumps and installing air-cooling type emergency generators, etc., and to shut down all the reactors at Hamaoka NPS until these measures are completed, as well as ascertained and evaluated by NISA.

On May 9, 2011, Chubu Electric Power announced its acceptance of this official request to shut down the Hamaoka NPS and submitted a report “Regarding Suspension of Operations at Hamaoka NPS” to the Minister of Economy, Trade and Industry. In response, the Ministry of Economy, Trade and Industry (METI) issued a ministerial statement on the same day to Chubu Electric Power. Accordingly, Chubu Electric Power decided to suspend resumption of operation of Unit 3 of Hamaoka NPS, and to shut down Unit 4 as of May 13, 2011 and Unit 5 as of May 14, 2011.

## XII. Lessons learned from the accident so far

The accident of Fukushima Nuclear Power Station has the following aspects: it was triggered by a natural disaster; it led to a severe accident of damage to nuclear fuel, Reactor Pressure Vessels and Primary Containment Vessels; and accidents of multiple reactors were evoked at the same time. Moreover, nearly three months have passed after the occurrence of the accident, a mid- to long-term initiative for its termination is needed so that it has imposed a large burden on society such as many residents in the vicinity have been required to evacuate for an extended period, it has been making a major impact on industrial activities such as farming and livestock industries in the related area. In this manner, there are many aspects different from the accidents at Three Mile Island Nuclear Power Plant and Chernobyl Nuclear Power Plant in the past.

Also, it is characterized by the fact that emergency response work and nuclear emergency preparedness activities had to be performed in a situation where the earthquake and tsunami destroyed the social infrastructure such as electricity, communication and transportation across a wide area in the vicinity, and by the fact that aftershocks frequently limited a variety of accident response activities.

This accident led to a severe accident, shook the trust of the people, and warned people engaged in nuclear energy about their overconfidence in nuclear safety. Because of this, it is important to learn lessons thoroughly from this accident. We will present the lessons classified into five groups at this moment bearing in mind that the most important basic principle in securing nuclear safety is defense in depth.
We will present lessons learned up to this moment classified in five groups. We recognize that a fundamental review is unavoidable on nuclear safety measures in Japan based on these lessons. Some of them are specific to Japan. However, we will include these specific lessons from the standpoint to show the overall structure of lessons.

The lessons in group 1 are those learned based on the fact that this accident has been a severe accident, and from reviewing the sufficiency of preventive measures against a severe accident.

The lessons in group 2 are those learned from reviewing the adequacy of the responses to this severe accident.

The lessons in group 3 are those learned from reviewing the responses for nuclear emergency in this accident.

The lessons in group 4 are those learned from reviewing the firmness of the basis for securing safety was established in the nuclear power station.

The lessons in group 5 are those learned from summing up all the lessons and reviewing the thoroughness in safety culture.

(Lessons in group 1) Strengthen preventive measures against a severe accident

1. Strengthen measures against earthquakes and tsunamis

This earthquake was an extremely massive one caused by plural linked seismic centers. As a result, in Fukushima Dai-ichi Nuclear Power Station, acceleration response spectra of seismic ground motion observed on the base mat exceeded the acceleration response spectra of the design basis seismic ground motion in a part of the periodic band. Although damage to external power supply was caused by the earthquake, damage to important systems, equipment and devices have not been confirmed so far. However, detailed status still unknown should be further investigated

The tsunamis which hit Fukushima Dai-ichi Nuclear Power Station were 14-15m high, substantially exceeding the assumed height of the design or evaluation. The tsunamis severely seawater pumps etc, which caused failure to secure emergency diesel power supply and reactor cooling function. The procedure manual had no assumed the impact tsunamis and only measures against a backrush. The assumption on the frequency and scale of tsunamis was insufficient as shown above so that actions for large-scale tsunamis were not taken enough.

From a view point of design, in seismic design in a nuclear power station, an active period of a capable fault to be considered is stipulated to be within 120,000-130,000 years (50,000 years in the old guideline), and a recurrence period of a big earthquake is approximately considered, and moreover, “residual risks” are required to be considered. Compared with this, designs against tsunamis have been performed based on traditions on past tsunamis and assured traces so that they have not been done in a way in which an appropriate recurrence period is considered in relation to a safety goal.

Reflecting on the above issues, we are committed to considering handling of plural linked seismic centers as well as strengthening quake resistance of external power supply. Regarding tsunamis, from the viewpoint of preventing a severe accident, we will assume appropriate

frequency and height of tsunamis in consideration of a sufficient recurrence period for attaining a safety goal. Then, we will perform a safety design of structures, etc. preventing them from the impact of immersion in the site caused by the assumed tsunamis in consideration of destructive capability of tsunamis. Moreover, from a viewpoint of defense in depth, supposing a possibility of tsunamis exceeding assumed tsunamis incorporated in the design of the buildings, we will take measures which can maintain important safety functions even in consideration of a flooded site and magnitude of destructive capability of a run-up wave.

2. Secure power supply

A major cause for this accident was failure to reserve the necessary power supply. This was caused by the facts that a diversity of power supply was not planned from a viewpoint of overcoming vulnerability related to defects derived from a common cause by an external event, and that equipment such as a switchboard was not installed to be able to withstand a severe environment such as flooding. Moreover, it was caused by the facts that battery life was short compared with the time required for restoration of AC power supply and that a require time goal was not clear for recovery of external power supply.

Reflecting on the above issues, we are committed to securing power supply at the site for a long time determined as a goal even in a severe situation of emergency by diversifying power supplies by means of preparing diverse emergency power supplies such as an air-cooled diesel generator, a gas turbine generator, etc., employing a power-supply car and so on, and preparing switchboards, etc. with high environmental tolerance and generators for battery charge, and so on.

3. Secure a firm cooling function of a reactor and a RCV

In this accident, the final place for release of heat (the final heat sink) was lost due to the loss of function of seawater pumps. Reactor cooling function was activated by water injection but core damage could not be prevented due to drain of water source and loss of power supplies, etc., and RCV cooling function also did not run well. We faced difficulties thereafter also, as it took time in reducing the pressure, moreover, in water injection after that also, water injection into a reactor by the heavy machinery such as a fire engine, etc. had not been prepared as a measure for accident management. In this manner, the loss of cooling function of reactors and RCVs aggravated the accident.

Reflecting on the above issues, we are committed to securing assured alternative cooling functions of reactors and RCVs by securing final alternative heat sinks for a long time such as diversifying alternative water injection functions, diversifying water sources for water injection and increasing volume, and introducing an air-cooling system and so on.

4. Secure a firm cooling function of spent fuel pools

This time, the loss of power supplies caused the failure to cool the spent fuel pools, requiring actions to prevent a severe accident due to the loss of cooling function of spent fuel pools in tandem with responses to the accident of the reactors. So far, a risk of a major accident of a spent fuel pool has been deemed small compared with a core event so that measures such as alternative water injection, etc. have not been considered.

Reflecting on the above issues, we are committed to securing firm cooling by introducing alternative cooling functions such as natural circulation cooling system or air-cooling system, and alternative water injection functions in order to maintain cooling of spent fuel pools even when power supplies are lost.

5. Thorough accident management (AM) measures

The accidents reached to the severe accident. The accident management measures had been introduced to Fukushima NPS as response to minimize the possibilities to reach the severe accidents or to reduce the influence in case of reaching to the severe accident. However, judging from the situation of the accidents, although the measures partially functioned such as alternative water injection from the fire extinguishing water system to the reactor, they did not fulfill a role in diverse responses including ensuring the power supplies and the reactor cooling function and were inadequate. In addition, the accident management measures are basically regarded as voluntary efforts by TEPCO, not legislative requirements, and so the details of improvement lacked strictness. Moreover the guideline of Accident Management has not been reviewed since its development in 1992 or strengthened or improved.

Reflecting on the above issues, we will be committed to position the accident management measures as legislative requirements, and develop the accident management to prevent severe accidents utilizing the probabilistic safety assessment including review of the design requirements as well.

6. Response to issues in concentrated siting of reactors

Accidents occurred at more than one reactor at the same time in the accidents, and the resources needed for accident response had to be dispersed. Moreover, because two reactors shared the facilities and physical distance between them was small, etc., progress of accident occurred at one reactor affected the emergency responses of nearby reactors.

Reflecting the above issues, we will be committed to make it possible to implement operation at the accident at a reactor where accident occurred independently from the operation at other reactors if one power station has more than one reactor, and assure the engineered independence of each reactor to prevent accident of one reactor from affecting nearby reactors. In addition, we will promote to develop the structure by Unit to carry out independent accident response with a central focus on person in charge of nuclear safety assurance.

7. Consideration on basic design such as placement of NPS, etc.

Since the spent fuel pools were placed on the higher part of the reactor buildings, response to the accidents were difficult. In addition, contaminated water from the reactor buildings affected the turbine buildings and expansion of contaminated water to other buildings was not prevented.

Reflecting the above issues, we will be committed to prepare for adequate placement of facilities and buildings to ensure to develop necessary responses such as cooling, etc. and prevent expansion of the accident influence in consideration of occurrence of severe accidents during the stage of basic design of placement of NSP, etc. In this regard, additional response will be taken to add the same function to the existing facilities.

8. Ensuring the water-tightness of important equipment facilities

One of the causes of the accidents is that many important equipment facilities including component cooling sea water pump facilities, the emergency diesel generators, switchboards, etc. were flooded by the tsunami, which impaired power supply and cooling facilities.

Reflecting on the the above issues, we will be committed to ensure the important safety functions, in terms of achieving the target safety level, even if hit by unexpected tsunami and flood when these facilities are placed near rivers. In concrete terms, we will ensure the water-tightness of important equipment facilities by installing watertight doors based on the

destructive power of tsunami and flood, blocking flood route such as pipes, and the installation of drain pumps, etc.

(Lessons in Group 2) Enhancement of measures against severe accidents

9. Enhancement of prevention of hydrogen explosion

In the accidents, a hydrogen explosion occurred at the reactor building in Unit 1 at 15:36 on March 12, and at the reactor in Unit 2 at 11:10 on March 14 as well. In addition, an explosion that was probably caused by hydrogen occurred at the reactor building in Unit 4 around 06:00 on March 15. Consecutive exposures occurred from the first one occurred at Unit 1 before taking effective measures. These hydrogen explosions worsened the situation of the accidents. In a BWR, inactivation is implemented and a flammability control system is installed in the containment in order to maintain the soundness of against the design basis accident. However, we did not assume the situation of an explosion in the reactor buildings caused by hydrogen leakage, and as a matter of course, the hydrogen measures for the reactor buildings were not taken.

Reflecting on the above issues, we will be committed to enhance the measures for prevention of a hydrogen explosion such as the installation of a flammability control system to function in the event of a severe accident in the reactor buildings, the establishment of facilities to blow off hydrogen, etc. in addition to the hydrogen measures in the containment.

10. Enhancement of containment vent system

In the accidents, we were interrupted by operability problems of the containment vent system in the situation in occurrence of severe accident. Moreover, as the function of removing released radioactive material in the containment system was inadequate, the system was not be able to be utilized effectively as accident management measures. In addition, the independence of the vent line was insufficient and so it may have had an adverse affect on other parts through connecting pipes, etc.

Reflecting on the above issues, we will be committed to enhance the containment vent system by increasing the operability and ensuring the independence of the containment vent system, strengthening the function of removing released radioactive material, etc.

11. Enhancement of accident response environment

In the accidents, the radiation dosage increased in the main control room and operators could not enter the room temporarily and it still remains diifficult to work in the room to this day for an extended period, and, as a result, the habitability in the main control room has decreased. Moreover, the accident response activities were affected at the on-site emergency station, a control tower of all emergency measures, in various sides as radiation dosage also increased and the communication environment and lighting deteriorated.

Reflecting on the above issues, we will be committed to enhance the accident response environment to implement the accident response activities in case of severe accidents such as strengthening radiation shielding in the control rooms and the emergency centers, enhancing the exclusive ventilation and air conditioning system on site, strengthening related equipment including communication, lightening, etc. without use of AC power supply, etc.

12. Enhancement of the radiation exposure management system at accident

In the accidents, although adequate radiation management became difficult as personal dosimeters were unusable, personnel engaged in radiation work were forced to work on site. In addition, radioactive material concentration measurements of the air were delayed, and as a result risk of internal exposure increased.

Reflecting on the above issues, we will be committed to enhance the radiation exposure management system at accident by providing personal dosimeters and protection suits and gears for accident, developing the system to be able to expand personnel at accident and improving the structure and equipment to promptly measure radiation dose of radiation workers..

13. Enhancement of training responding to severe accident

Effective training to respond to accident restoration at nuclear power plants and adequately work and communicate with relevant organizations in the wake of severe accidents were not sufficiently implemented. For example, it took time to communicate between the emergency office inside of the power station, the Nuclear Emergency Response Headquarters and the Local Headquarters and also to build collaborative structure with Self Defense Force, Police, Fire Authorities and other organizations which played important roles in responding to the accident. Adequate training could have prevented these problems in advance.

Reflecting the above issues, we will be committed to enhancing training to respond to severe accidents by promptly responding to accident restoration, identifying situations within and outside of power plants, facilitating the gathering of human resources needed for securing safety of residents and to effectively collaborate with relevant organizations.

14. Enhancement of instrumentation reactors and PCVs

Because instrumentation of reactors and PCVs was insufficiently functioned in the severe accident, it was difficult to promptly and adequately obtain important information such as, water levels and the pressure of reactors, and the source and amount of released radioactive materials. Reflecting the above issues, we will be committed to enhance instrumentation of reactors and PCV in the wake of severe accidents.

15. Central control of emergency supplies and equipment and rescue team in place

Logistics support has been diligently provided by those responding to the accident and supporting sufferers with supplies and equipment gathered mainly at J Village. However, because of the damage from the earthquake and tsunami in the surrounding area when the accident occurred, we could not promptly and sufficiently mobilize a rescue team to provide emergency supplies and equipment and support accident control activities. This is why the on-site accident response did not sufficiently function.

Reflecting on the above issues, we will be committed to centrally control emergency supplies and equipment and reinforce a rescue team for the operation of them in order to smoothly provide emergency support even under fierce circumstances.

(Lessons in Group 3) Enhancement of nuclear emergency response

16. Response to combined emergency of both large-scale natural disaster and nuclear accident

We had tremendous difficulty in communicating with relevant individuals and organizations, using telecommunications, mobilizing human resources, procuring supplies and others because it concurrently occurred with a massive natural disaster. As the nuclear accident has been prolonged, some measures such as evacuation of residents, which was originally assumed to be a short-term measure, have been forced to be extended.

Reflecting the above issues, we will be committed to prepare a structure and an environment where appropriate communication tools and devices and channels to procure supplies and equipment will be ensured in coincidental emergency of both massive natural disaster and nuclear accident. Also, assuming a prolonged nuclear accident, we will be committed to enhance emergency response including effective mobilization plans to gather human resources in fields who are involved with the accident response and sufferers support..

17. Reinforcement of environment monitoring

Currently, local governments are responsible for environment monitoring in an emergency. However, appropriate environment monitoring was not possible immediately after the accident because equipment and facilities for environmental monitoring owned by local governments were damaged by the earthquake and tsunami and the relevant individuals had to evacuate from the Off-site Center. To make up for this lack, MEXT cooperated with relevant organizations has conducted environment monitoring.

Reflecting on the above issues, the government will be committed to developing a structure to implement environment monitoring in a reliable and well-planned manner.

18. Segregation of duties between relevant central and local organizations, etc.

Communication between local and national offices as well as with other organizations was not sufficiently achieved due to lack of communication tools immediately after the accident and also roles and responsibilities of each side were not clearly defined. Specifically speaking, responsibilities and power were not clearly defined in the relationship between the NERHQs and Local NERHQs, between the government and TEPCO, between the Head Office of TEPCO and NPS on site, and also segregation of duties within the government. Especially, communication was not sufficient between the government and TEPCO at the initial point of the accident. Also, the Local Headquarters did not sufficiently function because the Off-site Center functioned because the Local Headquarters became unusable in the middle of the emergency response process.

Reflecting on the above issues, we will be committed to review and define roles and responsibilities of relevant organizations and clearly specify and reorganize roles and responsibilities in communication as well as such tools.

19. Enhancement of communication on the accident

Communication to residents in the surrounding area such as evacuation instructions was difficult because communication tools were damaged by the large-scale earthquake. The subsequent information to residents in the surrounding area, etc. and local governments was not always provided in a timely manner. The impact of radioactive materials on health and the radiological protection guideline of the ICRP, which are the most important information for residents in the surrounding area and others, were not sufficiently explained. We have focused on publicizing mainly accurate facts to the citizens and have not sufficiently present future outlook of the risks, which sometimes gave rise to concerns,

Reflecting on the above issues, we will be committed to reinforce adequate provision of information on the accident status and response etc. and appropriate explanation about the radiation effect to the residents in the vicinity. Also, we will keepin mind that the future outlook is included in the information delivered while incidents are ongoing status.

20. Enhancement of response to support from overseas and communication to the international community

The Japanese government did not appropriately respond to the support offered by other countries across the world because a specific structure to accommodate such support offered by other countries with the domestic needs in the Japanese government. Communication with the international community including prior notification to neighboring countries and areas on the discharge of water with low-level radioactivity to the sea was not always sufficient.
Reflecting on the above issues, we will be committed to developing an effective global structure, cooperating with international community, in order to develop a list of supplies and equipment effectively responding to any accident to be prepared internationally, clearly specify contact points for each country in advance in case of accident and encourage to share information through such an improved international notification structure.

21. Adequate identification and forecast of effect of released radioactive materials

The environmental effects of released radioactive materials were not fully identified because release source information could not be obtained when the accident occurred. Also, The System for Prediction of Environmental Emergency Dose Information (SPEEDI) was not fully utilized

to forecast effect of radioactive materials based on release source information, which is the primary function of this system because source information at the time of the accident could not be obtained. Even with such a constraint, SPEEDI should have been utilized as a reference of evacuation activities and other purposes by presuming diffusion trend of radioactive materials under a certain assumption. Although the results generated by SPEEDI are now being disclosed , it should have been done so from the initial stage.

Reflecting on the above issues, we will be committed to improving the instrumentation and facilities to ensure release source information can be obtained. Also, we will develop a plan to effectively utilize SPEEDI and other systems to address various incidents and disclose the data and results from SPEEDI, etc. from the beginning.

22. Clear definition of widespread evacuation area and radiological protection guideline in nuclear emergency

Immediately after the accident, evacuation area and “stay indoors” area were established and cooperation of residents in the vicinity, local governments, police and relevant organizations facilitated to implement evacuation and “stay indoor” instruction. As the accident prolonged, the residents had to stay indoors for a long period. Subsequently, however, guidelines of the ICRP and the IAEA were suddenly decided to be used when establishing deliberate evacuation area and evacuation prepared area in case of emergency. The size of the protection area defined after the accident was considerably larger than 8 to 10 km, which was defined as the area where protection measures should be carefully focused.

Reflecting on the above issues, we will be committed to clearly defining the scope of widespread evacuation area and guidelines of radiological protection criteria based on the experience of the current accident.

（Lessons in Group 4）Reinforcement of safety infrastructure

23. Reinforcement of safety regulatory bodies

Governmental organizations have different responsibilities for securing nuclear safety. For example, NISA of METI is responsible for safety regulation as a primary regulatory body, the Nuclear Safety Commission of the Cabinet Office is responsible for regulation monitoring of

the primary governmental agency and relevant local governments and ministries are in charge of emergency environmental monitoring. This is why it was not clear who has the primary responsibility for providing sufficient activities to ensure citizens' safety in an emergency. Also, we cannot deny that the existing organizations and structures made mobilization of capabilities difficult to promptly respond to such a large-scale nuclear accident.

Reflecting on the above issues, we will be committed to separate NISA from METI, review regulatory and administrative frameworks on nuclear safety and a structure of environment monitoring operation including NSC Japan and ministries and launch discussion on them.

24. Establishment and reinforcement of legal structure, criteria and guidelines

Many different issues were brought about regarding legal structures on nuclear safety and nuclear emergency preparedness and related criteria and guidelines based on the current accident. Also, based on the experiences of this nuclear accident, many issues would be identified as issues to be reflected in the standards and guidelines of IAEA.

Reflecting on the above issues, we will be committed to reviewing and improving the legal structures of nuclear safety and nuclear emergency preparedness and related criteria and guidelines. In doing so, considering not only structural reliability but also new knowledge and expertise including the progress of system concepts, measures taken for age-related degradation of the existing facilities should be reviewed and improved. Also, we will address technical requirements based on new laws and new findings and knowledge for facilities already approved and licensed, or in other words, how backfitting will be accommodated with laws and regulations. We will contribute to improve standards and guidelines of the IAEA with utmost effort by providing related data.

25. Human resources for nuclear safety and nuclear emergency preparedness

All the experts of nuclear safety, nuclear emergency preparedness, risk management and radiation medicine should get together to address the accident by making use of the latest and best knowledge and experience to respond to such a severe accident. Also, it is extremely important to develop human resources who are involved with nuclear safety and nuclear emergency preparedness in order to ensure mid-and-long term efforts on nuclear safety as well as to restore the current accident.

Reflecting on the above issues, we will be committed to enhancing human resource development of nuclear operators and regulatory organizations along with focusing on education of nuclear safety, nuclear emergency preparedness, crisis management and radiation medicine at educational organizations.

26. Securing independency and diversity of safety system

Although multiplicity was sought out to ensure reliability of safety systems, avoidance of common cause failures has not been carefully responded and independency and diversity have not been sufficiently secured.

Reflecting on the above issues, we will strongly committed to ensuring adequate response to common cause failures and the independency and diversity of safety systems to further improve the reliability of safety functions.

27. Effective use of Probabilistic Safety Assessments (PSA) in risk management

PSA has not always been effectively utilized when reviewing processes and efforts of risk reduction at nuclear power plants. While quantitative evaluation of rare risks such as large-scale tsunami may be associated with difficulty and uncertainty even in PSA, we have not made sufficient efforts to clearly identify such risks.

Reflecting the above issues, considering knowledge and experiences of uncertainties, we are committed to further actively utilizing PSA and developing safety improvement measures including effective accident management measures based on PSA.

（Lessons in Group 5）Raise awareness of safety culture

28. Raise awareness of safety culture

All those involved with nuclear energy should be equipped with a safety culture. “Nuclear safety culture” is stated as “A safety culture that governs the attitudes and behavior in relation to safety of all organizations and individuals concerned must be integrated in the management system.” (IAEA) Learning this message and putting it into practice is the starting point, duty and responsibility of those who are involved with nuclear energy. Without a safety culture, there will be no constant improvement of nuclear safety.

Reflecting on the current accident, the nuclear operators whose organization and individuals have primary responsibility for securing safety should look at every knowledge and finding, verify whether any weakness of a plant is suggested by this knowledge, and if they consider the presumption that risks regarding the public safety of the plant are sufficiently maintained as low is negatively affected, they should reflect whether they have seriously made efforts to take appropriate measures to improve safety.

Also, both organizations and individuals who are involved with nuclear regulations are responsible for securing nuclear safety for citizens should not overlook any suspicion about securing safety and should reflect whether they have seriously made efforts to respond to new knowledge and findings sensitively and quickly.

Reflecting the above issues, we will be committed to ensuring that a safety culture is kept in place by returning to the starting line that pursuit of defense in depth is indispensable for securing nuclear safety, ensuring that those involved with nuclear safety constantly learn professional expertise regarding safety and taking a stance to continuously examine whether there is any weakness in securing nuclear safety and any room for safety improvement.

## XIII. Conclusion

The nuclear accident that occurred at Fukushima Nuclear Power Station (NPS) on March 11, 2011 was caused by an extremely massive earthquake and tsunami rarely seen in history, and resulted in an unprecedented serious accident that extended over multiple reactors simultaneously. Japan is extending its utmost efforts to confront and overcome this difficult accident.

In particular, at the accident site, people engaged in the work have been making every effort under severe conditions for the restoration from the accident. It is impossible to resolve the situation without these contributions. The Japanese government is determined to make its utmost effort to support the people engaged in the work.

We are taking very seriously the fact that the accident, triggered by a natural disaster of an earthquake and a tsunami onslaught, became a severe accident due to such causes as losses of power and cooling functions, and that consistent preparation for severe accidents was insufficient. In light of the lessons learned from the accident, Japan has recognized that a fundamental revision of its nuclear safety preparedness and response is inevitable.

As a part of this effort, Japan will promote the “Plan to Enhance the Research on Nuclear Safety Infrastructure” while watching the status of the process of restoration form the accident. This plan is intended to promote, among other things, research to enhance preparedness and response against severe accidents through international cooperation, and to work to lead the results achieved for the improvement of global nuclear safety.

Japan will update information on the accident and lessons learned from it in line with the future process of restoration from the accident and further investigation and will continue to provide such information and lessons learned to the International Atomic Energy Agency as well as countries around the world.

As operators, manufacturers and governmental agencies make a concerted effort to address the situation in Japan, it feels encouraged by the support received from many countries around the world to whom it expresses its deepest gratitude.

We are prepared to confront much difficulty towards the restoration from the accident, and trust that we will be able to overcome this accident. To this end, we would sincerely appreciate continued support from the IAEA and countries around the world.